INSTRUCTION MANUAL

TRUCK-MOUNTED CONVEYORS

CONVEYOR-FBR-FIBERGLASS SERIES
TURNTABLES-RTH 3000, RTH 4000
RTH 6000

Cleasby Conveyors Inc. of Utah

PLEASE READ

The Following Signal Word Panels define signal words used in this manual. You must make yourself familiar with their meaning and application as it pertains to warnings and cautions provided in this manual. Please see ANSI Z535.6 for additional information.

DANGER	**DANGER** indicates a hazardous situation which, if not avoided, will result in death or serious injury.
WARNING	**WARNING** indicates a hazardous situation which, if not avoided, could result in death or serious injury.
CAUTION	**CAUTION**, used with the safety alert symbol, indicates a hazardous situation which, if not avoided, could result in minor or moderate injury.
NOTICE	**NOTICE** is used to address practices not related to personal injury.
CAUTION	**CAUTION**, without the safety alert symbol, is used to address practices not related to personal injury.

IMPORTANT INFORMATION

The fact that the FBR conveyor is partially produced and assembled from components of fiberglass and other traditional electrical non-conductive materials MUST NOT BE ASSUMED AS A SAFE-GUARD against an inadvertent contact with a power line. You must exercise the utmost care. There are many factors that influence the electrical conductivity of a structure such as the FBR conveyor. In addition**, IT IS AGAINST FEDERAL AND STATE LAW TO POSITION THE CONVEYOR WITHIN TWENTY (20) FEET OF A POWER LINE. ALWAYS USE EXTREME CAUTION WHEN OPERATING THE CONVEYOR. See 29 CFR 1926.1400**

⚠ DANGER

- Risk of DEATH or SERIOUS INJURY if conveyor or load comes into Contact with or Proximity to Power Lines. ***It is against Federal and State Law to position the conveyor within twenty (20) feet of a power line***. Always use extreme caution when operating the conveyor.
- Risk of DEATH or SERIOUS INJURY if conveyor or load comes into Contact with or Proximity to Power Lines. ***Never replace the hydraulic lines on the conveyor with substitution lines made with metal or rubber***. Replace only with identical brand and type as installed as original equipment on the conveyor. Call Cleasby Conveyors for information (800) 435-2446 or (801) 773-1311 for additional information.
- Risk of DEATH or SERIOUS INJURY if conveyor or load comes into Contact with or Proximity to Power Lines. ***Never replace the conveyor belt except with the identical brand and type as installed as original equipment on the conveyor.*** Call Cleasby Conveyors for information (800) 435-2446 or (801) 773-1311 for additional information.

The Hydraulic lines employed on the conveyor are a special **electrical non-conductive** material. Their basic properties resist the flow of electrical current and thus make them poor conductors. The fact that the composition of the hydraulic line material makes it a poor conductor of electricity, MUST NOT be considered as a safeguard against contact with or proximity to Power Lines. Numerous possibilities of various contaminants in the hydraulic fluid carried in the lines make possible the conduction of electrical current along these fluid corridors. THE HYDRAULIC LINES MUST NEVER BE REPLACED EXCEPT WITH AN IDENTICAL BRAND AND TYPE AS INSTALLED ON THE CONVEYOR.

The belt used on the FBR Conveyor is a special **electrical non-conductive** belt. Its' basic properties resist the flow of electrical current and thus make is a poor conductor. The fact that the composition of the belt material makes it a poor conductor of electricity, MUST NOT be considered as a safeguard against contact with or proximity to Power Lines. **Dirt, Dust, Debris** or other contaminants or the presence of **Water or other Fluids** on the surface of the belt may alter or change its conductive characteristics with the result that it may become a CONDUCTOR of ELECTRICITY. The PVC material employed in the fabrication of the belt is a unique and special composition. THE BELT MUST NEVER BE REPLACED EXCEPT WITH AN IDENTICAL BRAND AND TYPE AS INSTALLED ON THE CONVEYOR.

TABLE OF CONTENTS

WARNING AND CAUTIONS
- Warnings and Cautions 1-1
- Conditions and Locations 1-2
- Uses 1-3
- Operation 1-4
- Labels Placed by the Manufacturer

WARRANTY 1-7

SECTION ONE
GENERAL INSTRUCTIONS
- General 1-11
- Transporting and Positioning 1-13

SECTION TWO
MOUNTING INSTRUCTIONS
GENERAL
- Parts Supplied by ACI 2-1
- Parts Supplied by the Customer or Installer 2-1

INSTALLATION PROCEDURE
- Mounting the Turntable 2-7
- Mounting the Conveyor 2-8
- Connecting Hydraulic Hoses 2-9
- Bleeding the System 2-10
- Warning Labels and Safety Devices 2-10
- Final Inspection 2-11

SECTION THREE
OPERATING FEATURES
- Operating Features 3-1

OPERATING PROCEDURES
- Positioning Conveyor for operation 3-2
- Transporting Material to Roof 3-3
- Observing Live Load Limits 3-3
- Returning Conveyor to Traveling Position 3-3

SECTION FOUR
MAINTENANCE AND SERVICE INSTRUCTIONS
GENERAL
- General Instructions 4-1

ROUTINE MAINTENANCE
Daily Maintenance 4-1
Weekly Maintenance 4-1
Monthly Maintenance 4-2
Preparation for Storage 4-4
UNIT REPLACEMENT
Unit Replacement Instructions 4-4
NOTES
Lowering the Conveyor without Power 4-5
MAINTENANCE AND SERVICE RECORDS
Safety and Warning Labels 4-11
Labels Placed by You or the Installer 4-11
Suggested Forms

SECTION FIVE
PARTS IDENTIFICATION
Conveyor Parts 5-1
Turntable Parts 5-2

SECTION SIX
INTRODUCTION
INSTALLATION 6-1
Stabilizer Frame Mounting 6-1
Installing Stabilizer Legs and Cylinders 6-2
Mounting the Control Valve 6-3
Connecting Hydraulic Lines 6-4
Testing the System 6-5
OPERATION
Lowering the Stabilizers 6-5
Retracting the Stabilizers 6-5
MAINTENANCE
Daily Maintenance 6-6
Weekly Maintenance 6-6
Annual Maintenance and Preparation for Storage 6-6
PARTS LIST
Cylinder Rigging Parts 6-7
Stabilizer Assembly Parts 6-8

SECTION SEVEN
WARNING LABELS 7-1

IMPORTANT INFORMATION
PLEASE READ

This section contains special instructions and information for the FBR Series insulated fiberglass roofing conveyor that you must know.

It is essential that you read, understand, and comply with all warnings and instructions as set forth in this manual. Warning Labels are furnished together with a video tape and booklet entitled **"Conveyors and Electricity Don't Mix"**. The video recording (DVD) and booklet are free simply by calling **1-(800) 453-2446**. Additional warning labels and manuals are also available free of charge by calling this toll free number.

The fact that the FBR conveyor is partially produced and assembled from components of fiberglass and other traditional electrical non-conductive materials MUST NOT BE ASSUMED AS A SAFE-GUARD against an inadvertent contact with a power line. **You must exercise the utmost care**. There are many factors that influence the electrical conductivity of a structure such as the FBR conveyor. In addition, **IT IS AGAINST FEDERAL AND STATE LAW TO POSITION THE CONVEYOR WITHIN TWENTY (20') FEET OF A POWER LINE. ALWAYS USE EXTREME CAUTION WHEN OPERATING THE CONVEYOR.**

The fiberglass surfaces of the conveyor should be carefully inspected from time to time to make certain that they are free from oil, dirt and other grime that can accumulate on the conveyor. The presence on the fiberglass surface of this type of debris and other foreign materials and fluids, including water, may adversely effect the electrical conductivity of the conveyor, should it inadvertently come into contact with or proximity of a power line. Keeping the conveyor clean helps stop the path of electricity.

Please read and comply with the instructions and warnings that follow; and also the "IMPORTANT INFORMATION" section contained on the first page following the title page of this manual. There, directions and warnings are provided concerning among other things, replacement criterion for the conveyor belt and hydraulic fluid line.

WARNINGS AND CAUTIONS

Since there are so many factors to consider, Cleasby Conveyors (CM) cannot possibly provide you with an exhaustive list of all conceivable hazards or problems that may arise while operating a conveyor. While so engaged, you accept a demanding set of responsibilities that cannot be delegated to another. You must be ever mindful of your responsibilities and care necessary to perform your duties safely. (CM) cannot anticipate and thus warn you against all possible hazards. Therefore, you must apply the warnings and instructions provided both in the owner's manual, video (DVD) (see below) and labels attached to the machinery in the broadest sense. Do not limit them to the particular situation or set of circumstances described or depicted. The intended use of (CM) truck-mounted conveyors are to move a variety of roofing materials-**not people or equipment**, from the truck bed to an elevated location such as a rooftop. **When you use the equipment for other than its intended purpose, hazards arise.**

Because of the nature and function of the equipment, some moving parts are always exposed without benefit of shield or guard. Use extreme care. **READ ALL WARNINGS AND WARNING LABELS,**

USE the truck-mounted conveyor unit ONLY for its intended purpose, and no other. Operate the equipment only after you have been thoroughly trained in its use, including viewing the safety video, **"Conveyors and Electricity Don't Mix"** (see page 1-6).

Persons

1.) Training prior to operating equipment. Operate the equipment only after being thoroughly trained in its proper use, including reading the booklet and viewing the video provided **"Conveyors and Electricity Don't Mix"**. Since one type of conveyor unit may operate differently than another, ONLY operate equipment upon which you have received specific training. Training should include and anticipate both normal and emergency conditions. Users should be retrained in the safe operation of the equipment every six (6) months. If you have not operated the equipment within the past 60 days, retrain on the unit prior to using it.

2.) Health/Physical Requirements. Operate the conveyor and turntable only if you are free from health problems, or physical or mental limitations that might impair judgment or limit in anyway your ability to operate the equipment safely. Operator responsibilities typically include loading or unloading the conveyor with roofing materials. This activity requires a high degree of physical exertion. Accordingly, persons with health problems or physical limitations may unduly stress themselves, aggravate existing health conditions; and cause additional harm due the physical demands associated with this activity. In addition, such an operator may be placing others at risk.

3.) Caution when lifting. Use caution when lifting heavy objects. Failure to observe proper procedures and due care when lifting can result in bodily injury, including but not limited to, hernias and back stress. Wear a support belt.

4.) Be careful. Do not use the conveyor equipment in a careless or unguarded manner. Be aware of potential dangers that can, or do exist under particular operating circumstances, whether or not expressly identified by warning or instruction. Failure to exercise prudence and due care while operating the equipment is unsafe and hazardous.

5.) Follow the operating instruction. Follow the operating instructions with exactness.

6.) Training before adjusting. Only service or adjust the equipment if you have received appropriate training to do so.

7.) Clothing. Wear proper clothing when operating the equipment. Do not ware loose clothing, since it might get caught in the moving parts of the machinery. Also, wear appropriate personal safety equipment while operating the conveyor or turntable: i.e. steel-toed safety shoes (tennis shoes, or other shoes with a gripping tread, when working on the roof), hard hat and gloves, as necessary.

Conditions and Locations

1.) Truck Maintenance. Maintain the truck upon which the conveyor unit is mounted according to manufacturer's recommendations. Repair or replace damaged or worn parts or equipment promptly.

2.) Conveyor Maintenance. Properly maintain the conveyor as described in Section Four, Maintenance and Service Instructions" of this manual.

⚠ DANGER

Risk of DEATH or SERIOUS INJURY if the Conveyor or Load comes in Contact with or Proximity to Power Lines.

3.) **DO NOT OPERATE THE CONVEYOR NEAR ELECTRICAL POWER LINES**. It is against the law to operate the conveyor within twenty (20) feet of power lines. DO NOT OPERATE THE CONVEYOR IF POWER LINES ARE WITHIN THE SAFETY ZONE (see General Instructions, Section One). A good rule of thumb is to come no closer to a power line than the length of the conveyor, or in other words, 20-40 feet should be maintained between the conveyor and the nearest power line. If line voltage is unknown, kee fifty (50) feet away. If the conveyor comes close to, or in contact with power lines, both the conveyor and the truck will become charged with electricity. Almost all power lines carry enough current to kill you and anyone who is in contact with or near the conveyor or the truck.

4.) Truck Positioning. Position the truck on firm, level ground. This makes pivoting the conveyor as easy as possible. Make sure the truck is stable before releasing the conveyor boom from its resting position on the rack mounted to the truck; and before operating the conveyor. The truck will not be stable if it is on a pile of dirt, soft or unstable ground or other non-uniform support. If the truck is not stable, it may tip or lean during conveyor operation resulting in loss of control

5.) Truck Wheels. Block truck wheels to prevent rolling. The transmission will not help because it must be in "neutral" to power the conveyor hydraulic system.

6.) Stabilizers. Lower the stabilizers (which are attached to the truck frame), firmly to the ground in order to aid in stabilizing the truck against rollover.

⚠WARNING

Vehicle Rotation Hazard, Risk of Falling or other Serious Injury. Do Not Operate on Un-level Surface. Use Stabilizers.

7.) Inspect Job Site carefully before repositioning the conveyor. Be aware of equipment, workers, or other people on the ground, by the building or on the roof who may be affected in any way by the movement or operation of the conveyor.

8.) Keep truck and conveyor clear of trees, scaffolding, earth overhangs etc. If you bump them they could fall on something...or someone.

9.) Operating in Wind. Do not operate the conveyor in windy conditions. That means: if there is a brisk breeze, do not operate. IN NO CASE should you operate the conveyor when the wind exceeds 20 mph. In windy conditions, store the conveyor boom securely over the truck cab, and park the truck in a sheltered area.

10.) Altering Equipment. Do not alter the safety characteristics of the conveyor or turntable. Do not remove or modify any guards, safety valves, pressure relief valves, etc.

11.) Wet Conditions. If your conveyor is powered by an electric motor, operate only when dry. Water on the truck bed, conveyor or the ground increases the **risk of electrocution**.

Uses

1.) Transport Only Materials. The sole purpose of the conveyor is to transport materials, not people. Using the conveyor for any other purpose poses hazards (see Warning label above and on equipment).

2.) Conveyor not a Ladder. Do not use or allow anyone else to climb on the conveyor or use it as a ladder to reach a roof or other elevated location.

3.) Running Conveyor. Do not ride, stand or sit on a running conveyor, or allow anyone else to.

4.) Valves and Handles. Do not use the hydraulic valves and handles as steps or rests to bear the weight of any materials or people. Such abuse may damage the valves and impair their function, creating a hazardous condition.

5.) Conveyor Not a Crane. Do not use the conveyor as a crane to pick-up and lift, or rotate any objects or people.

6.) Weight Limits. Note and observe weight limits and load capacities of each conveyor. Each conveyor has a weight limit/load capacity of eighty (80) pounds per flight (cleat). That means, if eight (8) flights are showing on the top side of the conveyor at any one time, the load capacity is 720 lbs., to be distributed at no more than ninety (90) pounds in front of any given flight. Operating the conveyor with loads in excess of safe limits is hazardous.

Operation

1.) Do not operate the equipment until you have set-up an operating SAFETY ZONE around the truck and equipment, *(see General Instructions, Section Two, and Figure 1-1, Page 1-7)*. Always review operating instructions, decals and written brochures before attempting to

operate the equipment.

2.) Missing Safety Device. Do not operate the conveyor if it is missing any guard, or other safety device.

3.) Hands and Arms. Do not reach through any piece of equipment for any reason, whether it is in operation or not.

4.) People around Boom. Never allow anyone to stand under the boom, whether it is in operating or not. Maintain the SAFETY ZONE. Be especially watchful while raising, lowering or rotating the conveyor.

5.) Unauthorized Personnel. Do not let unauthorized and untrained individuals, especially small children, on, near or around the equipment.

6.) Training before Operating. Do not attempt to use the conveyor equipment unless you have been fully trained in its proper use and operation.

7.) Training on Turntable Controls. Do not attempt to raise, lower or rotate the boom, or run the belt on the turntable-mounted conveyor unless you are familiar with the hydraulic valves, control handles and functions.

8.) Unobstructed View. Operate the conveyor only when your view of the conveyor and the surroundings is complete and unobstructed. It is recommended that a "***spotter***" be used to watch the equipment as you move it.

9.) Center the Controls. Always inspect the hydraulic controls to make sure they are in the center, or “neutral” position before engaging the P.T.O.

10.) Support the Boom. Make sure the conveyor rests, or is supported on the roof while unloading material. A support foot is attached to the nose of the conveyor to sustain the weight of live-load plus conveyor fore section. Always use the support foot when possible. If the support foot is missing or unavailable, arrange other means to support the conveyor on the roof and call (CM) or your dealer for replacement.

11.) Moving the Truck. Do not move the truck while the conveyor is in a raised or working position.

12.) Unload Evenly. Unload the material off the truck evenly. If too much weight is on one side of the truck bed or the other, the truck can tip over on its side, especially when rotating the conveyor boom.

13.) **Use your head**. Review and follow all operating instructions, warnings and cautions contained in the various instructions, warnings and labels, video and manuals.

CLEASBY CONVEYORS INC. OF UTAH
FULL WARRANTY

What is Covered:
The Warranty covers any and all defects in material and workmanship not to include normal wear and tear or lack of maintenance.

How Long Coverage Lasts:
One (1) year from the date of purchase.

What Will Cleasby Conveyor Do?
Under this Warranty, Cleasby Conveyors (CM) obligation is limited to repairing or replacing, at (CM)'s discretion and at no charge, any part of the product that by examination, (CM) determines to be defective.

What Does This Warranty Not Cover?
The Warranty does not cover components or parts not manufactured by (CM); such as engines, belts, batteries, tires, hydraulic hoses, and motors etc. (See individual Warranties. (CM) will insofar as possible, provide assistance to facilitate a remedy with supplier companies). Further, all damages traceable to abuse, misuse, or an act of God (such as a flood) and/or consequential and incidental damages are not recoverable under this warranty. Some states do not allow the exclusion or limitation of incidental or consequential damages, accordingly, the above limitations or exclusions may not apply to you.

How to Get Service:
(CM) requires that you accompany all returned merchandise by an RMA (Return Merchandise Authority) number. Your local dealer or distributor can aid you in securing Warranty replacement and service. If you do not have a representative in your area, you many contact the factory directly, at:

Cleasby Conveyors Inc of Utah
362 South Main
Clearfield, Utah 84015
(801) 773-1311

Repair or replacement, FOB Clearfield, Utah, USA.

Your Rights Under State Law:
This Warranty gives you specific legal rights, and you may also have other rights which vary from state to state.

SECTION ONE
GENERAL INSTRUCTIONS

TRUCK-MOUNTED CONVEYORS

FBR-FIBERGLASS SERIES

TURNTABLES- RTH 3000, RTH 4000
RTH 6000

GENERAL INSTRUCTIONS	1-11
TRANSPORTING AND POSITIONING	1-13

362 South Main, Clearfield, UT 84015
801-773-1311 * 800-453-2446 * Fax 801-773-8608

Cleasby Conveyors (Rev. 08/14/12)

IMPORTANT INFORMATION

This section contains special instructions and information for the FBR Series insulated fiberglass roofing conveyor that you MUST KNOW.

It is essential that all **Warnings, Cautions and Instructions** noted in the written or video format be applied in the broadest sense. You should pay particular attention to the Warnings Pertaining to Power Lines and associated DANGERS with Contact or Proximity of the conveyor to the same. The fact that the FBR conveyor is made-of fiberglass does not mean that if the conveyor comes in contact with or proximity of a power line that you would be safe. **It is against the law to come within twenty (20) feet of any power line** whether you are using a metal or fiberglass conveyor. There are many factors that determine if a conveyor may become a conductor of electricity, even if the conveyor is made of fiberglass. Always use **EXTREME CAUTION**. Review all warnings and safety labels for the conveyor, turntable and truck as often as possible. Review the **Safety Video (DVD) and Safety Video Booklet titled: "Conveyors and Electricity Don't Mix"**. The video tape and booklet are free simply by calling this **toll free number (800) 453-2446.**

The fiberglass of the conveyor should be carefully inspected from time to time to make certain it is clean from oil, dirt, grime and debris of other forms that may accumulate on the conveyor surface. The accumulation of these substances on the surface of the fiberglass tends to increase the conductivity of the conveyor independent of the fact that the basic structure is composed of fiberglass. The debris noted provides an avenue for conduction of electricity. Therefore, keeping the conveyor clean helps to prevent the flow of electricity if the conveyor were to come in contact with or proximity to a power line.

The hydraulic lines employed on the conveyor are a special electrical non-conductive material. Their basic properties resist the flow of electrical current and thus make them poor conductors of electricity. The fact that the composition of the hydraulic line material makes it a poor conductor of electricity, MUST NOT be considered as a safeguard against contact with or proximity to power lines. Numerous possibilities of various contaminants in the hydraulic fluid carried in the lines make possible the conduction of electrical current along these lines. THE HYDRAULIC LINES MUST NEVER BE REPLACED EXCEPT WITH AN IDENTICAL BRAND AND TYPE AS INSTALLED ON THE CONVEYOR.

The belt used on the FBR Conveyor is a special electrical non-conductive belt. Its' basic properties resist the flow of electrical current and thus make it a poor conductor. The fact that the composition of the belt material makes it a poor conductor of electricity, MUST NOT be considered as a safeguard against contact with or proximity to Power Lines**. Dirt, dust, debris or other contaminants or the presence of water or other fluids on the surface of the belt**, may change its conductive characteristics, with the result that the belt may become a CONDUCTOR of ELECTRICITY. The PVC material employed in the belt is a unique and special composition. THE BELT MUST NEVER BE REPLACED EXCEPT WITH AN IDENTICAL BELT that MUST BE ORDERED from Cleasby Conveyors **[(800) 453-2446 or Fax (801) 773-8606]**.

GENERAL

These instructions cover the general operation of truck-mounted conveyors. A specific conveyor may have options that require different operating procedures. Accompanying this manual is a safety training video cassette provided as an aid in training operators. **The video is a crucial part of the training. Please watch the video and read the booklet "Conveyors and Electricity Don't Mix".**

TO THE OPERATOR: This manual is written for you. Knowing what is in it could possibly save your life or the life of others, and provide you with information to protect you from injury. Read it carefully. OPERATE the conveyor ONLY AFTER you have received thorough TRAINING (including the safety video) in its safe operation.

TO THE OWNER: Cleasby Conveyors (CM) has prepared this manual to aid you in the training process. YOU ARE RESPONSIBLE FOR making sure that your employees understand the proper operation of the equipment; and how to use it SAFELY. Instead of simply telling your employees to read the instructions, take them out and make SURE they understand and use the equipment properly. Make sure they watch the safety video. If you have any questions whatsoever concerning these instructions or any matters not covered herein, PLEASE CONTACT your local dealer or distributor, or call Cleasby Conveyors directly.

CM recommends that following initial training, workers receive PERIODIC REVIEWS of operating and safety procedures. Your regular monthly safety meeting is a good time to have this review.

Please read and refer to OSHA Standard -- 29 CFR 1926.1400

TRANSPORTING AND POSITIONING

1.) Review the warning labels (see Section One herein) and conduct recommended daily visual inspection of the unit prior to leaving the yard (see Section 4-1). Make sure to secure the conveyor boom to its support on the headboard of the truck. Examine the conveyor service record periodically to insure that maintenance personnel are following the recommended service and maintenance program.

2.) Before moving the truck, elevate the turntable post until the conveyor is resting parallel with the truck bed. There are two reasons for this, first, the lower the turntable post, the higher the nose end of the conveyor; thus, if the turntable post is too low, the nose end of the conveyor may be too high to get under bridges and other overhead structures. Second, if the post is too high, the nose-end of the conveyor may be slanting down and obstructing the view of the driver.

3.) Observe all traffic rules when driving to and from the job site. Observe height limitations at all bridges and overhead structures. When making turns, remember that the conveyor boom may overhang the truck unit both front and rear.

4.) At the job site, secure a location for the truck that will satisfy the requirements for creation of a **SAFETY ZONE** (see Figure below). Additionally, take into account other safety factors including requirements that the truck be positioned on firm, level ground. This will aid in stabilizing the truck/conveyor system and facilitate rotation of the conveyor boom. **See 29 CFR 1926.1400.**

5.) Block the truck wheels to prevent rolling. Please note that the truck transmission is not available to aid as a break, inasmuch as the transmission must be placed in “neutral” in order to power the conveyor hydraulic system.

6.) Set up the **SAFETY ZONE** around the truck as depicted in Fig. 1-2 below by use of ropes, barricades or other suitable means. Think of the **SAFETY ZONE** as a giant tin can, wide enough to allow for an additional twenty (20) feet in all directions surrounding the truck and twice as tall as the height of the conveyor if it were positioned vertically (directed straight-up). For example, if your conveyor is 30 feet long, the diameter of the can would need to be twice the length of the conveyor plus the extra ten feet as noted, resulting in a diameter of 90 ft. of the imaginary tin can. The height would necessarily be a full 60 ft. (see fig. 1-2 below). The same safety zone for a 26 ft. conveyor would correspond to a base of 72 feet and a height of 52 ft.

It is vitally important that you read and understand elements of relevant controls as articulted in OSHA Standard 29 CFR 1926.1400 regarding establishment of a safety zone and mandatory safe operatoin distances from power lines of various voltage.

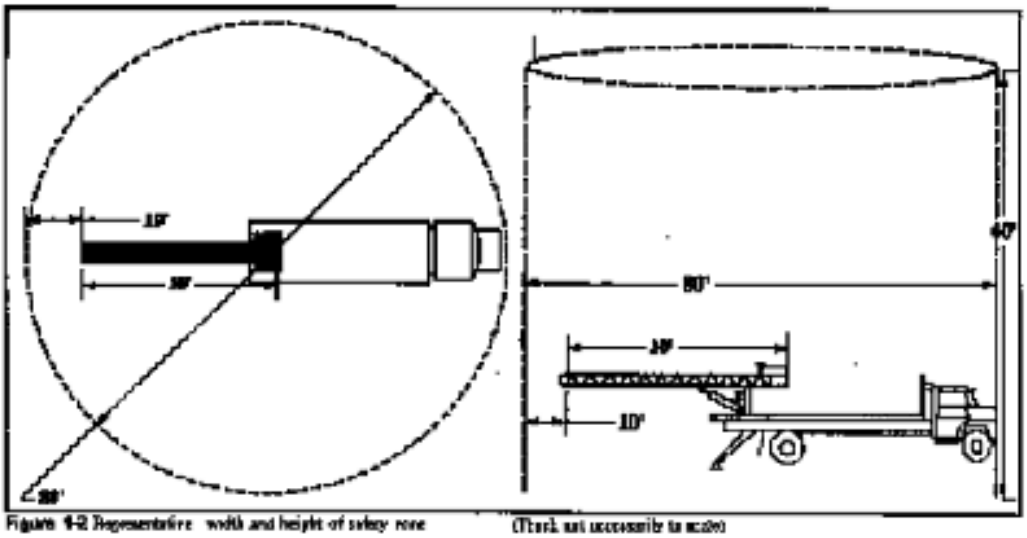

Figure 1-2 Representative width and height of safety zone (Truck not necessarily to scale)

7.) Clear the **SAFETY ZONE** of equipment, observers and uninvolved people.

8.) Visually inspect the **SAFETY ZONE** area to locate items you cannot move, and to observe the location of any **POWER LINES. DO NOT** operate the conveyor if any power line(s) are within the **SAFETY ZONE**. If you cannot find a location where power lines do not intrude within the **SAFETY ZONE** or where the ground is firm and level, **DO NOT USE THE CONVEYOR. See 29 CFR 1926.1400.**

9.) Once you have set-up a **SAFE** operation **ZONE**, lower the stabilizers (which are attached to the truck frame) firmly to the ground and lock them in place.

⚠WARNING

Vehicle Rotation Hazard, Risk of Falling or other Serious Injury. Do Not Operate on Un-level Surface. Use Outriggers.

10.) You shall provide a dedicated spotter who's soul responsibility is to watch separation distance between any powerline and the equipment, see 29 CFR 1926.1400 to keep a sharp lookout while you are moving the conveyor boom for anything that comes within the **SAFETY ZONE** and to warn you.

11.) Slowly lift the conveyor boom from its position over the truck cab to a height well above the roof upon which you intend to rest it (the maximum safe height is probably an angle of about seventy degrees from horizontal).

12.) Carefully rotate the boom to the point of delivery; then, slowly lower the boom until the support foot is resting firmly on the roof surface.

13.) Always support the nose of the conveyor while the conveyor is in use. The support foot on the nose end of the conveyor rests on the roof surface and aids to steady the conveyor.

14.) After unloading the material, check the **SAFETY ZONE** again and clear it before moving the conveyor. When you know the **SAFETY ZONE** is clear, raise the conveyor boom high enough to easily clear the side of the building (structure) and the edge of the roof (the maximum safe height is probably an angle of about seventy degrees from horizontal), and slowly rotate it into its traveling position over the cab. Lower the boom slowly, and carefully, into it resting lace. Lowering the boom too quickly can damage the truck cab, the conveyor boom or both. Once you have lowered the boom, secure it in place before moving the truck.

15.) If your company operates more than one truck-mounted conveyor unit, (CM) strongly recommends that you stay with one specific unit (i.e. that crew assignments not be rotated among the various units). This is especially important if the trucks in the fleet are mounted with conveyors of different lengths. Different trucks and conveyors operate and respond differently, even under seemingly identical conditions.

SECTION TWO
MOUNTING INSTRUCTIONS

TRUCK-MOUNTED CONVEYORS
FBR-FIBERGLASS SERIES
TURNTABLES-RTH 3000, RTH 4000
RTH 6000

GENERAL	2-1
Parts Supplied by ACI	2-1
Parts to be Supplied by the Customer or Installer	2-1
INSTALLATION PROCEDURE	2-7
Mounting the Turntable	2-7
Mounting the Conveyor	2-3
Connecting the Hydraulic Hoses	2-4
Bleeding the System	2-5
Warning Labels and Safety Devices	2-5
Final Inspection and Adjustments	2-6

362 South Main, Clearfield, UT 84015
801-773-1311 * 800-453-2446 * Fax 801-773-8608

GENERAL

The following instructions describe a step-by step process for mounting the conveyor and turntable. (CM) recommends that an experienced installer professionally mount your conveyor and turntable. With proper mounting, you may anticipate may years of reliable service. Conversely, improper installation may damage the equipment and actually make it hazardous to operate.

NOTE:
Cleasby Conveyors STRONGLY Recommends installing truck-bed stabilizers on all trucks carrying truck-mounted conveyor units

The quality of construction of the truck bed and method of attachment of the bed to the truck frame are important factors underlying a quality installation. On the contrary, an improperly constructed or mounted truck bed will usually give poor service, and may in fact shorten useful life. Moreover, such compromised fabrication may damage the conveyor and /or turntable and make them hazardous to operate.

Parts Supplied by (CM)

(CM) completely assembles, aligns and tests each conveyor and turntable at the factory prior to shipping. In addition, each turntable is painted with a high-visibility, weather-resistant paint for protection. Each unit is furnished, fully equipped with all necessary parts. (CM) also provides WARNING LABELS that MUST be placed in the cab and bed of the truck on which the conveyor and turntable are to be mounted.

NOTE:
Cleasby Conveyors is not responsible for any loss or damage resulting from improper installation of either the truck bed or the conveyor and turntable

The turntable is mounted on a pallet and shipped, fully equipped with all necessary valves, fittings and hydraulic hoses.
(CM) provides in addition, a piton-type hydraulic pump, oil storage reservoir, and all mounting bolts to secure the turntable to the truck bed.

The installer may choose to use a different pump and oil reservoir. Substitution is acceptable, if the capacities and pressures match with those of the overall system. These instructions describe the procedures for mounting (CM)'s standard package. The mounting may vary somewhat with a different pump system.

(CM) ships the stabilizer package with the stabilizers completely assembled and fastened to a pallet with the main mounting bracket. (CM) also includes a two-spool hydraulic valve and valve mounting bracket in the set, and tack two support tubes in place into the open end of the stabilizer mounting bracket (remove and discard the support tubes when the unit is mounted on the truck).

CLEASBY CONVEYORS
TRUCK AND STABILIZER
HOSE SCHEMATIC
11-15-05

*SEE NOTE

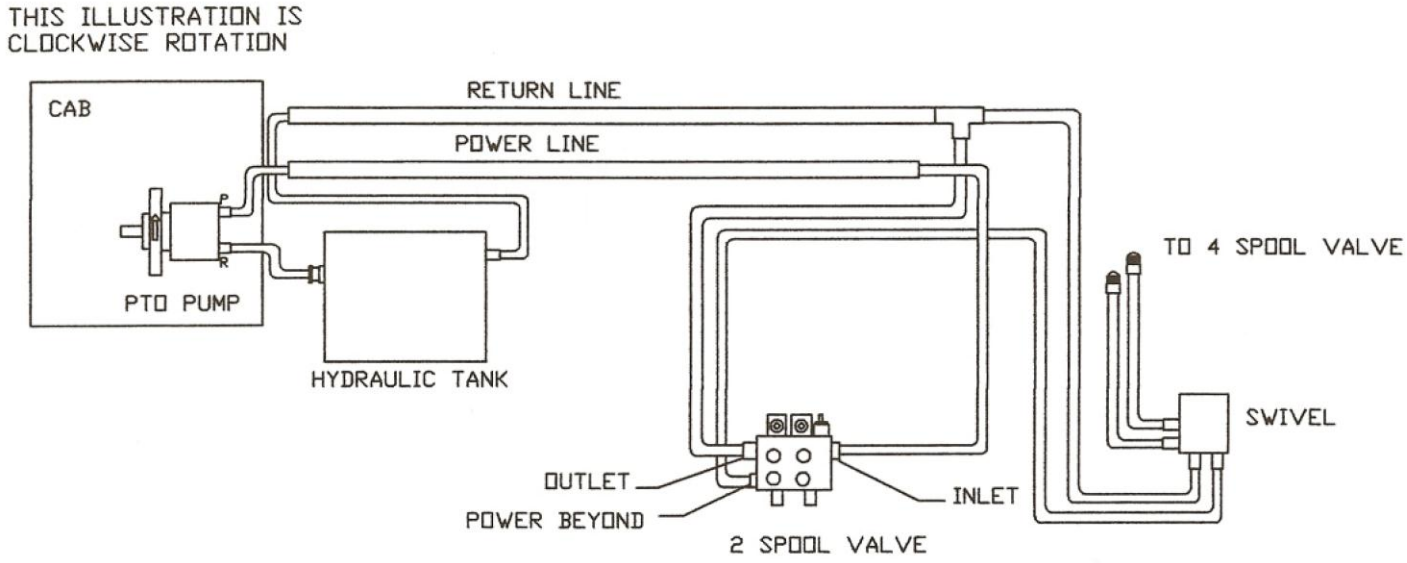

NOTE:
IF THE TRANSMISSION IS CLOCKWISE ROTATION
THE PRESSURE IS THE RIGHT PORT
IF THE TRANSMISSION IS COUNTERCLOCKWISE ROTATION
THE PRESSURE IS LEFT PORT

CLEASBY CONVEYORS
362 S MAIN, CLEARFIELD, UT 84015
801-773-1311 * 800-453-2446 * FAX 801-773-8608

CLEASBY CONVEYORS
RTH TURNTABLE HOSE SCHEMATIC
11-16-05

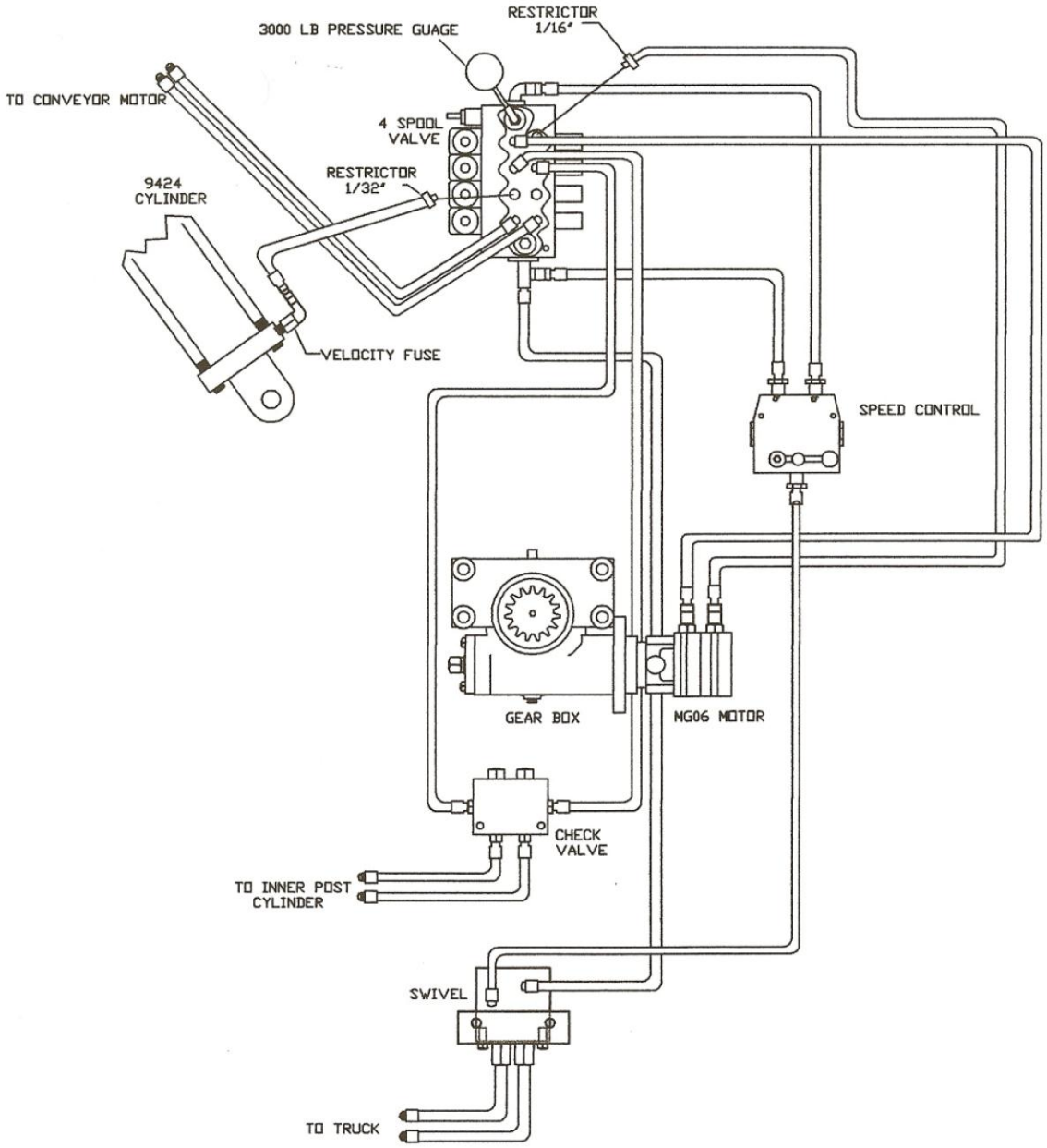

CLEASBY CONVEYORS
362 S. MAIN, CLEARFIELD, UT 84015
801-773-1311 * 800-453-2446 * FAX 801-773-8608

Parts to be Supplied by the Customer or Installer

Because of the diversity in trucks and installations, there are certain parts (CM) does not supply. These include the P.T.O. and all necessary fittings to connect the pump to the truck transmission.

The turntable comes with hydraulic hoses; however it may be necessary to acquire additional hosing in order to connect the pump. Additionally, (CM) does not supply hosing to connect the stabilizers and stabilizer control valves. Certain other small parts and fittings are to be acquired by the customer or installer.

INSTALLATION PROCEDURE

(CM) recommends the following installation procedures. Please note advisories that will assist you in the process.

Mounting the Turntable

1.) Securely mount the oil reservoir unit underneath the truck bed and attach to the frame. This will ensure a sufficient resistance to forces arising out of operation of the pump and corresponding torque production. Allow adequate clearance between the top of the reservoir and the truck bed to permit access to the reservoir for filling with hydraulic oil.

GPM 8-10 gallons for pump and reservoir

Operating Pressure Setting - 1800 psi

2.) Connect the pump to the customer purchased power take-off (PTO) and the truck transmission. The PTO needs to be rated minimally at 85% of engine speed and not to exceed 110%. Alternatively, the truck engine RPM should run between 700 to 800 RPM and not to exceed 1000 RPM. Please check the pump for proper rotation direction before installing.

3.) Mount the turntable centered at the rear of the truck bed. It is most important that the turntable is securely mounted to the truck frame (not just the truck bed). It has been our experience that the following method for mounting has proven effective.

a.) Cut a 34" long x 30" wide hole in the bed of the truck positioned so as to lie equal distant between the frame rails. In the case of mounting the RTH series turntable, make certain that there is clearance around the truck and bed frame for the rotation motor to freely rotate in full circle (i.e. 360 degrees) without obstruction. It may be necessary to notch out a small portion of the frame work to allow the motor to rotate.

b.) Position the turntable base plate to ensure that the turntable post is centered relative to the square hole cut in the bed of the truck. Concurrent with establishing center line position, ensure that the edges of the base plate are parallel with the sides of the truck bed.

c.) Referring to Figure 2-1, drawing (1), note that this view depicts hole pattern dimensions consistent with most truck frames. **A Note of Caution**: prior to drilling the bolt holes, measure the truck frame to make certain that the actual

dimensions of the truck frame are in fact consistent with values depicted in the drawing. If they are not, adjust the hole pattern dimensions accordingly.

d.) Given proper positioning of the turntable, drill the bolt holes with a 13/16 inch diameter drill bit through the base plate and truck bed.

e.) Place the bolts in paired holes with washers, lock washers and nuts on the upper surface of the base plate. The bolts should be positioned an equal distance form either side of the "C-Channel" of the truck frame as viewed from below the truck bed. With the bolts properly positioned, the channel support members are ready to weld.

f.) Align the channel support members with the outer edge with the mounting block. The support members should be properly marked for reference for correct installation. Remove the bolts and mounting block and weld.

g.) Install all bolts, washers, lock washers and nuts.

h.) Initially establish a finger-tight fit and proceed with the following tightening pattern. Each pair of bolts constitutes a single station. At completion of the procedure, the bolts should be torqued to 225 (+/- 5-ft.-lbs.). Select one of the four stations and tighten both paired bolts to 75-ft.-lbs. Continuing, move to the station located diagonally across from the first station and tighten these bolts to 75 ft.-lbs. Now, tighten the remaining paired bolts in the alternate corner stations to 75 ft.-lbs. Use this same sequence through two additional stages i.e. 150 ft.-lbs and finally, 225 ft.-lbs.

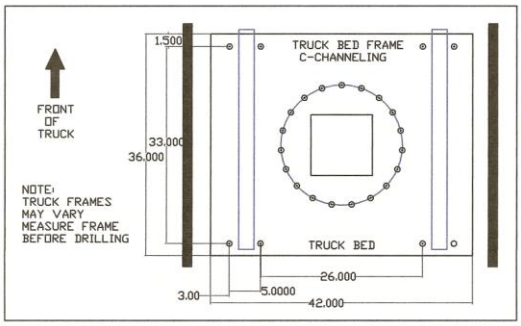

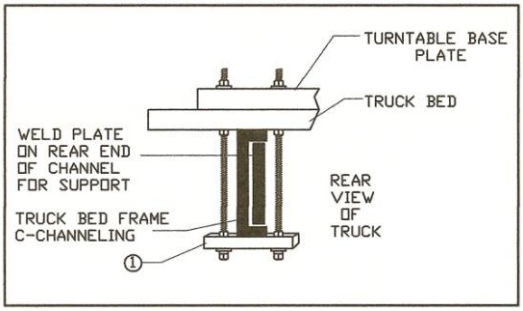

Mounting the Conveyor

1.) Attach the saddle feature of the conveyor mount to the turntable post (see Fig. 2-3). This is accomplished by inserting the steel pivot pin (1 1/4 inch diameter by 14 3/4 inch length, provided with your installation kit) through the pivot ears on the saddle feature of the conveyor and the hub stock on the top of the turntable post. Next, insert the one (1.0) inch diameter pin through the clevis on the end of the hydraulic cylinder and the ear welded on the fore section of the saddle cross member. Lubricate the pins and make sure all washers and cotter pins are in place. Make sure the clevis nuts are tight.

Connecting Hydraulic Hoses

1.) You may now connect the hydraulic hoses to the turntable.

2.) Connect the two ½ inch hoses attached to the detente (locking) valve, to the hydraulic lines on the bottom of the conveyor (use Teflon tape or other suitable sealer). All other hydraulic lines have been previously connected at the factory. Observe that the orientation of the lines is such that when the valve handle is pushed forward, the belt moves forward, and in reverse, when the handle is pulled to the rear (the forward, or "up" valve direction is toward the conveyor lifting cylinder attached to the post). Switching the hoses will not cause any damage; however, if the conveyor does not run in the correct direction (as set forth supra, i.e. according to the valve position), reverse the hoses. When not in use, all hydraulic functions must be positioned in either the "neutral" or "off" position.

NOTE:
Stabilizer hydraulic function-please refer at this time to Section Seven for proper procedures and installation instructions

3.) Locate the two (2) ten (10) foot hydraulic hoses (the power and return lines) and connect them to the pump and reservoir respectively. The extension should be ½ inch ID (inside diameter) hydraulic tube or two-wire braid hose rated for at least 2000 PSI. Now, attach the power line hose to the pressure port of the pump. The power line hose is connected to the top of the valve bank attached to the turntable post (be sure to use a good grade of thread sealer).

The return line is connected to the lower pressure port of the pump and to the IO hose originating from the bottom of the hydraulic valve, located on the post.

4.) Tighten all fittings and hose connections. All turntables are pressure-tested and checked for leaks at the factory, prior to shipping. Sometimes, however, vibrations experienced in transit can cause the fittings to loosen which may result in leaks. The hydraulic reservoir, mounted under the truck bed, should be filled with a good grade of heat resistant oil such as Conoco # 46.

5.) When the FBR Fiberglass Conveyor is positioned in the conveyor rack, there is direct pressure applied to the lower surface of the side panels of the conveyor at the point of contact. To prevent damage from occurring at this point of high specific stress, it is recommended that you place a strip of wood or rubber in the base of the rack to act as a buffer. Be sure to mount by bolting the "U"-shaped metal frame marked "Important" which is attached to the conveyor prior to shipping. This "U"-shaped frame protector will prevent the fiberglass channel from being damaged each time the conveyor is

raised or lowered from the head board of the rack.

Bleeding the System

1.) Start the truck engine and engage the PTO with the engine running at idle. Run the engine for a few minutes to warm-up the oil. Then engage the hydraulic motor on the conveyor in both directions (fore and aft) to expel air from the system. Run all other hydraulic functions (except swing) in both forward and reverse directions to likewise discharge trapped air in the system.

2.) Take special care when bleeding the hydraulic swing function. Gently feather the flow with the valve through the rotation motor until the oil has completely circulated through the circuit. Repeat in the reverse direction.

Warning Labels and Safety Devices

1.) There are a variety of warning labels, cover guards, safety valves, restrictors and other safety devices installed on the conveyor and turntable for your protection. For instance, the Stop Valve (part #12AN) connected to the conveyor lifting cylinder part (prevents the conveyor boom from falling when elevated, in the event of a hydraulic hose or connection failure.). **DO NOT remove any warning labels or safety devices.** If a hydraulic function does not operate properly, check for plugged ports, and determine if the safety valves or restrictors require cleaning. If these steps fail to resolve the difficulties, contact your local dealer or call (CM) for assistance.

2.) The hydraulic system has various pressure relief valves to prevent damage from excess pressure. These relief valves are of a type that are non-adjustable, and pre-set at the factory. **DO NOT** alter or modify in any way. The system operating parameters established via these valves is sufficient and proper to operate the conveyor and turntable.

NOTE:
The turntable has installed within the hydraulic system a cross-port relief manifold (4"X4 ½ “) which contains two (2) restrictors, pre-set to a flow rate maximum of two (2) gallons per minute (gpm). DO NOT remove these manifold restrictors

NOTICE Operating the unit at excessive pressure will cause damage to the equipment and void the warranty.

Final Inspection and Adjustments

1.) Hydraulic oil level should be checked with the conveyor in the down position and filled as necessary.

2.) Check and adjust the alignment and tension of the belt as necessary.

3.) Inspect the conveyor and turntable to make certain that all warning label stickers are in place (see Section Seven). If any sticker(s) is missing, or damaged, contact the dealer, distributor, or service center or (CM), or in the event the SAFETY VIDEO ane/or pamphlet **“Conveyors and Electricity Don’t Mix”** is missing, call (CM) at our toll-free number **(800) 453-2446** for replacement. Attach the special Warning Decals (WARNING LABELS/STICKERS) included with these instructions as directed in Section One, WARNINGS AND CAUTIONS, paragraph “Labels to be Placed by You or Your Installer”, sub-paragraphs 1 & 2. As there noted, Warning Label 24AR must be attached to the dash of the truck so as to be in clear view of the operator; and, five (5) Warning Labels as noted supra, must be attached to the side of the truck bed, around its perimeter.

4.) Equip the truck bed with a support rack on top of the back board on which to rest the conveyor when it is not in use. Also include a tie-down strap to this rack.

NOTE:
Operating or service pressures vary depending upon load input on the system. Actual running pressure should be no more than 1800 psi. For example, an empty belt will only pull or place a demand on the system in the range of 400-500 psi, while post operation will require 2000 psi. The relief pressure is factory set at 2000 psi and can be tested by running the post down to its full retracted position; and concurrently maintaining the handle in the down position. The gauge should then read 2000 psi.

5.) If the conveyor extends beyond the front bumper of the truck, provide some sort of support possibly fastened to the front bumper for the conveyor to rest on while in transit.

6.) Recheck the tightness of all bolts and nuts throughout the turntable and its mounts, in addition to those of the conveyor. Check for oil leaks.

7.) The conveyor and turntable were partially lubricated at the factory. It will therefore be necessary to fully lubricate the unit fully prior to placing it in service. Raise the post fully and grease it well on all sides with a thick coating of grease. Then lower the post and wipe off the excess grease from the top edge of the outer post. Also grease the turntable at the various lubrication points (look for the grease zerks) on the outer post, the turntable gear bearing and saddle pivot pin on top of the inner post (see general maintenance instructions). The conveyor and turntable are now ready to go out on the job.

SWIVEL ASSEMBLY

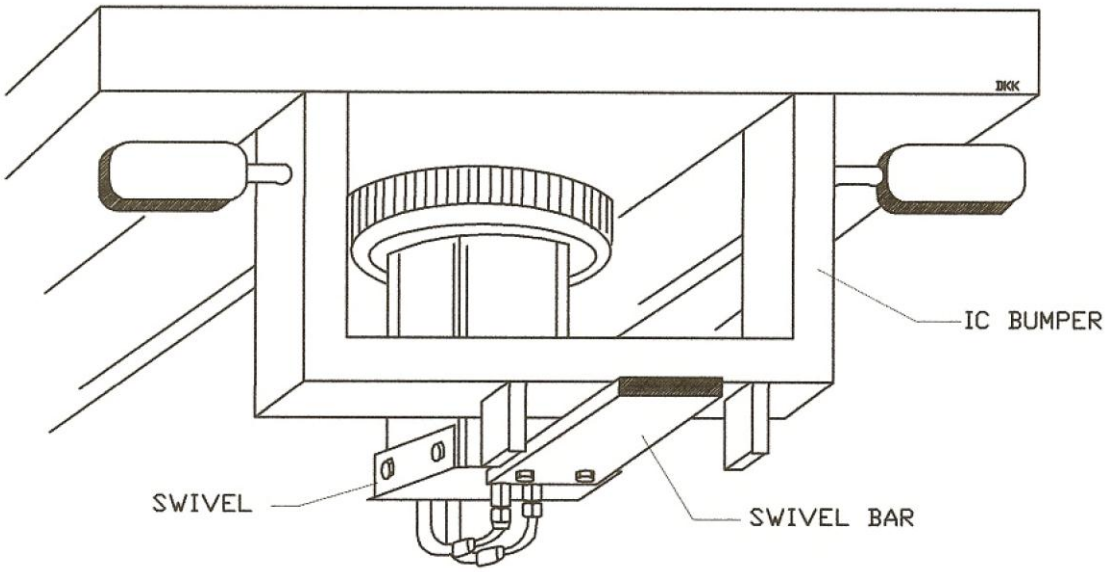

NOTE: BAR PLACEMENT IN THIS DIAGRAM IS FOR ILLUSTRATION PURPOSES ONLY AND IS NOT TO BE USED AS AN EXACT REFERENCE POINT WITH REGARDS TO BAR POSITIONING. THE BAR IS MORE LIKELY TO BE POSITIONED ABOVE THE BUMPER ON MOST UNITS.

PLEASE ALLOW A MINIMUM OF ½" MOVEMENT IN ALL DIRECTIONS WHEN MOUNTING THE BAR. ANY TYPE OF FASTENING THAT INVOLVES WELDING OR BOLTING DOWN THE BAR WILL VOID THE WARRANTY.

IT IS CRITICAL THAT THE SPACERS PROVIDED WITH THE BAR BE PLACED BETWEEN THE BAR AND SWIVEL BASE AND THAT THE BAR IS MOUNTED IN A LEVEL PLANE, FORM BUMPER TO SWIVEL BASE.

SECTION THREE
OPERATING INSTRUCTIONS

TRUCK-MOUNTED CONVEYORS

FBR-FIBERGLASS SERIES
TURNTABLES-RTH 3000, RTH 4000
RTH6000

OPERATING FEATURES	3-1
OPERATING PROCEDURES	3-2
Positioning Conveyor for Operation	3-2
Transporting Material to Roof	3-3
Observing Live Load Limits	3-3
Returning Conveyor to Traveling Position	3-3

362 South Main, Clearfield, UT 84015
801-773-1311 * 800-453-2446 * Fax 801-773-8608

OPERATING FEATURES

These operating instructions apply to the RTH series of fully hydraulically-operated turntables. The FBR Fiberglass constructed conveyors are used with the RTH turntables.

Before attempting to operate the conveyor/turntable, READ and familiarize yourself with the "General Instructions Section" of this manual.

Fig. 3-1 Hydraulic Controls Mounted on Center Post

The RTH series turntable comes with a full range of hydraulic functions (see Fig. 3-1).

There are four (4) controls which govern the flow of hydraulic fluid in support of various operating functions:

- ► Conveyor Lift
- ► Conveyor Rotation
- ► Belt Power
- ► Raising and Lowering Post

The standard hydraulic system (CM) provides employs a direct drive pump and reservoir that the installer connects to the truck transmission by a PTO.

NOTICE

Never drive the truck or race the engine while the PTO is engaged. The pump operates at the correct speed, and produces sufficient oil flow when the truck engine is idling. Driving the truck or racing the motor may damage the pump.

Hydraulic fluid lines connect the pump to valves on the turntable post. As load is placed on the system, the pressure correspondingly increases to accommodate the resistance. The factory has pre-set the pressure relief valves in the system to provide enough power to operate the unit at full capacity while keeping the pressure within safe operating limits. If the unit does not operate properly with the pre-set pressures, the system either: (1.) is being incorrectly operated; or (2.) there is a problem in the hydraulic system. Advise your maintenance for correction. The hydraulic system also incorporates a variety of flow restrictors and check valves. Never operate the turntable and conveyor if any of these safety control devices has been removed or is missing.

OPERATING PROCEDURES

Observe the following procedures while operating the conveyor:

Positioning Conveyor for Operation

1.) Select and secure a safe operation site (See General Instructions). Set up a **SAFETY ZONE** around the truck (See General Instructions, Section One, pp 1-3 through 1-4 and Figure 1-21) with ropes, barricades or other suitable equipment. See 29 CFR 1926.1400

2.) Review the Warning and Operating Instructions contained in this manual and the Warning Labels (Stickers) attached to the conveyor and turntable. Review the Instruction Manual and SAFETY VIDEO provided (if missing, call (CM) at **(800) 453-2446** for a free replacement. If you should have any questions, get help as needed before starting operation.

3.) Make sure you are familiar with the positioning of the hydraulic function control valves and that all the valves are in the "off" or "neutral" position before engaging the PTO.

4.) Block the wheels. Be sure the truck gears are in neutral, and the parking brakes are locked before engaging the PTO.

5.) Unhook the chains supporting the stabilizer legs. Push down on the rear control handle to lower the right side stabilizer. Continue to lower the stabilizer until the truck rises slightly. Push down on the front control handle to lower the left stabilizer until the truck bed is level. If the ground is soft, place planks or blocks under the stabilizer feet for greater stability. Extend the stabilizers only enough to stabilize the truck. Do not raise the truck wheels off the ground.

6.) Unfasten the conveyor from its resting position, and slowly raise the conveyor to a height well above the roof upon which you intend to rest it (the maximum recommended inclination is an angle not to exceed 70 degrees from the horizontal).

7.) For RTH series turntables, engage the rotation function lever, specially marked on most units, and rotate the conveyor slowly until the nose is properly positioned. The conveyor may then be lowered to come to rest on the roof.

8.) Adjust the height of the post to place the lower end of the conveyor at a convenient loading height.

9.) Support the nose of the conveyor on the roof with the support foot before stating the conveyor.

⚠ CAUTION

Never operate the conveyor belt while lowering or rotating the conveyor.

10.) Start the conveyor belt only after the conveyor is resting solidly on the roof, alerting the worker(s) on the roof.

11.) The valves that control the turntable functions are spring-loaded "return to center" devices with a forward and reverse function. They should shut-off automatically when released. If they do not, inspect and repair them to restore automatic centering.

Transporting Materials to Roof

1.) The valve controlling the conveyor belt is a “detent” type that stays in position once it is set. It also has a forward and reverse function.

2.) FBR belt-type conveyors have a control valve at the nose end allowing the person receiving materials coming off of the conveyor to stop or start the belt when necessary (see Figure 3-2).

3.) The valves are set so that moving the valve handles toward the conveyor lifting cylinder mounted on the turntable post, engages the “forward” or “up” function. The rotation on RTH series turntables is intended to be in the direction that you move the control handle. Test the movement of all components prior to field use. If the valve motion and component direction are inconsistent, make the necessary corrections to rectify.

Fig. 3-2 Control valve at nose of FBR conveyor allows receiving person to control material flow.

4.) The cylinder inside the post on RTH series turntables permits the post to raise and lower to provide clearance for truck cargo among other reasons. It also raises and lowers the conveyor to a convenient height above the truck bed when loading the various materials on the conveyor. The RTH-6000 raises higher than the RTH-4000 and so forth.

5.) The speed control permits the operator to control the amount of fluid flowing to the various functions. This is particularly useful in varying the speed with which the belt moves along the conveyor.

Observing Live Load Limits

Note and observe weight limits and load capacities for the conveyor. The conveyor has a weight limit/load capacity of one bundle per flight (vertical paddle) for shingles weighing up to 90 pounds per bundle; and one bundle for every other flight for shingles weighing over 90 pounds per bundle.

Returning Conveyor to Traveling Position

1.) After unloading, recheck and clear the **SAFETY ZONE** before moving the conveyor. Raise the conveyor boom high enough to clear the side of the building and the edge of the roof, or if possible, raise the conveyor to a height approaching maximum angle of rotation (70 degrees) and then slowly lower the conveyor into its traveling position over the truck cab. To avoid damage to the truck or conveyor boom, do not drop the conveyor. Secure the boom in place

2.) When the turntable is in its lowest position, the nose end of the conveyor may be too high to clear bridges. Thus, elevate the post to ensure that the conveyor is positioned parallel with the bed of the truck, prior to traveling.

3.) Disengage the PTO before moving the truck.

SECTION FOUR
MAINTENANCE AND SERVICE INSTRUCTIONS

TRUCK MOUNTED CONVEYORS

FBR-FIBERGLASS SERIES
TURNTABLES-RTH 3000, RTH 4000
RTH 6000

GENERAL	4-1
ROUTINE MAINTENANCE	4-1
Daily Maintenance	4-1
Weekly Maintenance	4-1
Monthly Maintenance	4-2
Preparation for Storage	4-4
UNIT REPLACEMENT	4-4
NOTES	4-5
Lowering the Conveyor without Power	4-5
MAINTENANCE AND SERVICE RECORDS	4-5
WEAR PLUG REPLACEMENT & ADJUSTMENT	4-11
SAFETY & WARNING LABELS	4-11

362 South Main, Clearfield, UT 84015
801-773-1311 * 800-453-2446 * Fax 801-773-8608

Cleasby Conveyors (Rev. 08/14/12)

GENERAL

This section contains instructions for maintaining and servicing, (1) FBR conveyors; (2) RTH 3000, RTH-4000 and RTH-6000 full hydraulic turntables. The service record card included with these operating instructions shows the factory recommended maintenance schedule. Also use this card to keep track of maintenance and repairs performed.

(CM) engineers its conveyors to provide years of service in for heavy, continuous use. With proper maintenance, the conveyor system will work when you need it.

Failure to maintain your conveyor and turntable will cause it to wear out faster then it normally would.

Always perform the scheduled maintenance before putting the conveyor in service.

NOTE
Only trained, qualified personnel should perform maintenance and adjustments.

ROUTINE MAINTENANCE

Daily Maintenance

Inspect each conveyor and turntable unit daily before leaving the yard. Inspect (1) the conveyor boom; (2) all hydraulic hoses and fittings, and (3) the turntable post and head for cracks, splits or other damage. Inspect all steel pins, nuts and bolts (including (a) the pins that connect the conveyor saddle to the post; (b) the pins that connect the cylinders). Make sure the right nuts and cotter pins that keep these items in place are securely attached. Check all fittings for leaks and clear the truck bed of all oil residue. Similarly, inspect stabilizers.

Weekly Maintenance

Service each conveyor and turntable unit weekly while in use. Schedule a specific day in the week to perform maintenance, preferably before leaving the yard. It should take about ten to fifteen minutes to complete. Follow the ten-point service program as listed below:

1.) Maintain tire pressure as specified on the truck tire side walls. Be sure all tires on the truck are the same size;

2.) Inspect hydraulic hoses, valves, motors and fittings for leaks or damage, tighten, repair or replace, as necessary;

3.) Keep the valve bank clean and free from obstructions. Replace valve handles when rubber becomes worn and clear the truck bed of all extraneous material and oil;

4.) Grease the inner turntable post to avoid abrasive wear. Always keep the post well-lubricated. Lubricate using only a good grade of lithium-based all-purpose grease.

5.) Grease the pin used to hinge the conveyor saddle or platform to the

turntable post. Always keep the pin well greased (the grease zerk is located on the top of the post);

6.) Grease the thrust gear bearing bolted to the underneath side of the turntable base plate (the thrust gear bearing has a grease zerk on the inside of the bearing to permit lubrication);

7.) Inspect all cylinder and hinge pins for wear and be sure all cotter and clip pins are present. Replace if missing, or if wear is visible.

8.) Tighten all nuts and bolts.

9.) Check the gear alignment and condition of the teeth on both the small and the large gear. Always keep the bearing greased and inspect: (a) the ear (located on the inner turntable post) to which the cylinder that lifts the conveyor up and down is pinned; (b) the ear on the saddle where the other end of the cylinder is pinned. Replace the entire post or saddle if cracks, breaks, sagging or other signs of wear are visible.

Monthly Maintenance

When in use, adjust and align major turntable and conveyor components even if no problems are evident upon visual inspection. Check the following items every month, **See 29 CFR 1926.1400:**

1.) Check the hydraulic oil level, and add fluid as necessary. (CM) recommends use of Conoco No. 46 Anti-Wear hydraulic oil or equivalent.

2.) Check the conveyor belt for tension and alignment according to the instructions contained below.

Fig. 4-1 Inspect the chain and adjust the chain tension

3.) Inspect the chain drive sprockets located at the top end of the conveyor (see Fig. 4-1).on the inside of the conveyor frame, for true alignment and correct chain tension. Realign the sprockets and tighten the set of screws as necessary. Press the chain with your thumb midway between the sprockets. You should be able to move the chain about ½ inch with thumb pressure. Tightening the chain too tightly can damage the bearings. Lubricate the No. 60 roller chain on the chain drive. (CM) recommends a multi-purpose lubricant such as a lithium-based spray grease.

IMPORTANT NOTE
When inspecting the FBR conveyor belt, read the notice regarding BELT REPLACEMENT, see "IMPORTANT INFORMATION", p-i.

4.) Inspect the conveyor belt for proper tension. It is normal for the belt to loosen after its initial use. The amount the belt will stretch depends upon the loads it carries, but will probably be somewhere around three (3) percent. Pull up hard on the belt at the center of the conveyor so as to lift it up off the conveyor frame. There should be between 4-6 inches of clearance maximum between the belt and the frame (see Fig 4-2)

Fig 4-2 Conveyor belt tension is correct when belt can be lifted 4-6 inches in middle on conveyor.

5.) If the clearance is more than the specified distance, tighten the belt by adjusting the take-up screws at the bottom end of the conveyor (see Fig. 4-3). If the clearance is less than the specified distance, loosen the belt similarly. Running the conveyor with the belt too tight can damage the belt and cause excessive bearing wear.

Fig 4-3 Conveyor belt tension is adjusted by turning the adjusting screws at the base at the end of the conveyor.

6.) Inspect the belt to make sure the "V"-Guide on the bottom side of the conveyor runs in the center of the head and tail pulleys and in between the channel underneath the belt. A belt that is too loose may walk excessively, even if it is properly aligned. Similarly, you can align the belt at the bottom end by adjusting the long take-up screws that tighten the belt.

7.) Check all seated bearings for wear. Replace worn bearings.

8.) The conveyor rotates by means of a hydraulic motor mounted underneath the base plate of the turntable. The rotation system is a gear-to-gear drive system driven with a small 2-inch pinion gear that in turn, drives a 22-inch by 2-inch gear and bearing. The bolts that fasten the gear bearing to the base plate are special high-strength steel alloy fasteners. During assembly of the turntable, these bolts are torqued to a value of 201 ft.-lbs. [5/8 inch SAE Grade 8 bolts]. It is necessary for your safety, and that of others, to maintain the bolts at the specified torsional value.

⚠ CAUTION -verify proper torsional value by applying a torque wrench to each bolt connecting the bearing/gear to the base plate. Verify all bolts in the pattern, both on the upper and lower mounting surfaces once **EVERY THREE MONTHS. DO NOT EXCEED THE SPECIFIED TORSIONAL VALUES.**

9.) Keep the gears greased.

10.) Inspect and replace any damaged or otherwise deteriorated warning or safety labels (see Section 5 for appropriate labels and locations). Replacement labels are available free of charge from your local dealer, distributor or service center. If you are unable to locate a local representative, contact CMI for replacements.

Preparation for Storage

When the conveyor will remain unused for more than one month, conduct the following maintenance before placing the unit in storage:

1.) Clean the truck, conveyor, and turntable thoroughly.

2.) Perform the weekly and monthly maintenance described above. Maintain the truck as recommended in the owner's manual.

3.) To prevent rust, oil all exposed cylinder rods with the same grade of hydraulic oil specified for use in the system.

4.) Order any replacement parts required, and schedule any maintenance necessary to prepare the unit for the next season. .

UNIT REPLACEMENT

In addition to the required periodic servicing and maintenance detailed above, note that certain parts of the conveyor need periodic replacement. Important: **Read the special instructions for belt and hydraulic line replacement for FBR conveyors located at the beginning of the manual**. Although (CM) employs every effort to assure that customer expectation of performance is exceeded, from time to time however, it may be necessary to replace components following extended use. As is the case with any mechanical system, components ware out. The rapidity with which this occurs is a function of a number of factors, including environmental conditions, extremes in hot and cold or damp conditions. Also and most significantly, hours in service and the nature of use rather light, moderate or heavy. These and other factors all come to bear in predicting component longevity.

Cleasby Conveyors, recommends that you replace certain parts before they fail. A complete failure of certain components may create a safety hazard or cause extensive damage to other costly parts. The following replacements are highly recommended when a careful inspection indicates excessive wear or damage:

1.) It is very important that you see to it that the safety and warning labels placed on the conveyor and turntable at the factory are always readable. If not, they must be replaced. Replacement labels are available, free of charge from either your dealer, distributor or directly from the factory.

⚠ DANGER

Risk of DEATH or SERIOUS INJURY if the Conveyor or Load comes in Contact with or Proximity to Power Lines

Never replace Hydraulic lines with metal or rubber substitutes

The Belt Must Not be replaced except with an IDENTICAL belt that must be ordered from Cleasby Conveyors (800) 453-2446

2.) As a result of exposure to the elements, the rubber hydraulic hoses on the conveyor will deteriorate even if the

unit is not in regular use. Heavy use or damage can also abrade the outer cover on the hoses. Under normal usage, the hoses should last two to four years. When the hoses show deep or extensive cracking or splitting of the outer cover, replace them.

3.) Inspect the pinion gear and gear bearing. Insure that the teeth are in good shape, and that the gears are aligned properly. Make sure the motor mounting bolts are tight (see previous instructions).

IMPORTANT: When using a FBR-Series fiberglass conveyor, change the hydraulic oil every **SIX MONTHS** at least. This will eliminate any metal chips or other particles suspended in the hydraulic system and help insure the electrical insulation standards for the fiberglass conveyor. See 29 CFR 1926.1400.

4.) After three to five years, it may be necessary to replace the seals in the valves, cylinders and pump. Operating the unit with dirty or contaminated oil, however will shorten the life of these parts significantly. Dirt in the oil can cause scoring of the interior metal surfaces, while contaminants can cause rust, corrosion and seal deterioration. Drain and replace the oil with Conoco No. 46 anti-wear hydraulic oil, or its equivalent. If oil becomes contaminated through pump or other component failure, replace the fluid immediately.

5.) Replace the saddle hinge pin, cotter pins and clips, if wear is evident.

NOTES

Lubricate the saddle hinge pin by using the grease zerk on top of the turntable post.

Keep all nuts and bolts tight. Torque the bolts that hold the thrust gear bearing to the base plate (top and bottom) to 201 ft.-lbs. [5/8 inch SAE Grade 8 Bolts]. Keep all other nuts and bolts tight.

Lowering The Conveyor without Power

The quick instruction is: DON’T EVEN TRY! Hydraulic power may be unavailable if the truck motor won’t start. If a hose breaks, or if a power take-off fails. If this happens, do one of two things, first, bring in a portable power supply to get the conveyor to the rack, second, get to a repair facility, or use a crane to lift the conveyor back into the traveling position.

The hydraulic cylinder that raises and lowers the conveyor has a velocity fuse valve that maintains pressure in the raise side of the cylinder until the pressure releases. This keeps the conveyor in position, even if there is no hydraulic power.

MAINTENANCE AND SERVICE RECORDS

A permanent maintenance and service record is critical to the proper maintenance of a reliable and safe conveyor system. On the following pages you will find blank maintenance and service pages. Please feel free to make photocopies for permanent use in your maintenance and service records. There are spaces provided for the operator or service person to date and initial the record each time a service is performed. There is also a space

provided for comments concerning problems and to note when repairs are made. If a separate maintenance group maintenance group maintains the conveyor system, forward this section and the maintenance and service records to that group. In most cases, the operator will perform the daily maintenance. Therefore, the daily maintenance record should stay with the conveyor.

CLEASBY CONVEYORS MAINTENANCE & SERVICE INSPECTION LIST

Customer Name:_____ **Inspection Date:** _____
Address:_____ **Work Order #:** _____
Phone:_____ **Truck #:** _____

O.S.H.A. INSPECTION REQUIREMENTS: O.S.H.A. 1926.550 requires that an employer shall perform daily and monthly inspections and maintain results of inspections for each hoisting machine and piece of equipment. It further requires that a thorough annual inspection of hoisting machinery be made by a competent person, or by a government or private agency recognized by the U.S. Department of Labor; and that the employer maintain a record of the dates and results of inspections of each hoisting machine and piece of equipment. The following are suggested inspection items to perform on Cleasby conveyors, turntables and stabilizers in order to comply with O.S.H.A Regulation 1926.550.

GENERAL INSTRUCTIONS: All inspections listed should be performed as schedule indicates. Daily inspections do not have to be recorded but should be verified and recorded monthly. A copy of completed form should remain with conveyor at all times. **If you do not understand these instructions, or if you are not sure whether or not a part should be replaced, please call the manufacturer; Cleasby Conveyors, 1-800-453-2446**

D = Daily W = Weekly M = Monthly S = Semi-Annually	INSPECTION DESCRIPTION	P = Pass F = Fail	REPAIRED YES/NO DATE	

Conveyor Model # _____ **Serial #** _____

D	Check safety and warning decals for legibility and replace if necessary			
D	Check conveyor mounting pin and brass bushing for excessive wear			
D	Check hydraulic hose and fitting for leaks and replace only with orange **NON-CONDUCTIVE** hydraulic hose			
D	Check instruction tube at the bottom side of conveyors for manual			
D	Check on/off belt control valve for smooth operation			
W	Check loading guard. Replace if damaged or bent			
W	Check nose loops for wear and replace if necessary			
W	Check roof support legs and pins and replace if missing			
W	Check chain and sprocket guard and replace if missing or damaged			
W	Clean conveyor to eliminate conductive contaminates			
M	Inspect fiberglass channel for cracks, excessive wear or holes			
M	Check conveyor saddle for wear or cracks in welds or metal			
M	Check drive chain and sprockets for alignment or excessive wear			
M	Check tail pulley wheels, bushings, shaft and take up plates for wear			
M	Check drive drum wheels, bearings, shaft and grease if necessary			
M	Check belt for excessive wear, cracks and tension and replace with only a **NON-CONDUCTIVE** PVC belt			
M	Tighten all nuts and bolts			
M	Check all cleats on belt to make sure nuts and bolts are tight. Replace any cleats that may be missing.			
M	Check belt return rollers and tracking guides for excessive wear.			

CLEASBY CONVEYORS MAINTENANCE & SERVICE INSPECTION LIST (CON'T)

Turntable Model # _____ **Serial #** _____

D	Check safety and warning decals for legibility and replace if necessary			
D	Check velocity fuse, hose and restrictor fitting and replace if missing			
D	Check hydraulic hose and fitting for leaks and replace if necessary			
D	Check four spool control valve for smooth operation			
W	Check cylinder pins, washers and cotter pins, replace if worn or missing			
W	Check hydraulic reservoir for proper oil level. Change oil semi-annually			
W	Check brass wear pads and Teflon wear plug for wear, replace if necessary			
W	Check post cylinder ears and weld for cracks and repair if necessary			
W	Check control valve handles and labels, replace if necessary			
M	Check inner and outer post for wear and excessive play			
M	Check gear bearing for excessive wear and grease as needed			
M	Check gear bearing bolts, replace if worn, cracked, stripped or broken			
M	Check pinion gear and gear bearing for alignment			
M	Check top and bottom inner post cylinder pins and cotters, replace if necessary			
M	Check all metal welds for cracks and wear			
M	Check turntable mounting bolt and blocks for wear			
M	Check turntable posts for grease. Add grease as needed.			
S	Change hydraulic oil filter on return line			

Stabilizer Model # _____ **Serial #** _____

D	Check safety decals for legibility, replace if necessary			
D	Check control valve for smooth operation			
D	Check holding valve on stabilizer leg			
D	Check hydraulic hoses and fittings for leaks, replace if necessary			
W	Check hydraulic cylinder, pins and cotter, replace if necessary			
W	Check hydraulic cylinder ears and welds on legs for wear			
W	Check Stabilizer foot, leg and hinge pins for wear			
W	Check control valve handles and labels, replace if necessary			
M	Check stabilizer frame welds for cracks and wear, repair if necessary			

Powerbed Model # _____ **Serial #** _____

M	Check pinion and gear alignment			
M	Check gears for damage and wear			
M	Check chains, links, and pins for wear and bending			
M	Check if push bar is bent, damaged or has cracks			
M	Check if 2x3 rails have cracks, damage or wear			
M	Check safety doors if bent or missing			
M	Check hoses and fittings for leaks or wear			
M	Check all welds for cracks			

INSPECTION BY: _____ *** INSPECTION/REPAIR COMMENTS ON BACK PAGE**

INSPECTION/REPAIR COMMENTS

Cleasby Conveyors Inc. of Utah

362 S. Main
Clearfield, UT 84015

Re: Replacement/Adjustment Procedure-RTH Series Turntable Wear Plugs

A coupler consisting of a Wear Plug Housing, Cap Screw and Delrin© Plug are depicted in Figure No. 1 in assembled and exploded view respectively (see below).

The Delrin© Plug provides low friction bearing support between contacting surfaces of the columns during extension and retraction of the inner post.

Normal use will require occasional replacement of the Delrin© Plug. The repeated extension/retraction cycle of operation of the inner post, over time wears away the protruding segment of the plug. As the plugs wear (one on each side of the post, see Fig. 1) the gap or space between the columns narrows. To avoid metal to metal contact, the plugs must be adjusted for position to correct for the narrowed gap lost through wear or replaced if no further adjustment capability exists.

Replacement and/or periodic adjustment of position of the Plugs is best accomplished as follows:

1. Bring the conveyor into Horizontal Orientation 180 degrees from its normal resting position in the Headache rack in order to achieve a minimum gap between posts of approximately 1/4 inch. **DANGER!** Look up and around. Made Certain there are no overhead wires or power lines that may interfere or come into contact with the conveyor during positioning for replacement. **See the Owners Manual for additional Warnings and Instructions**. If you do not have an owner's manual, please contact Cleasby for a replacement. Dial **1-(800) 453-2446**. **See 29CFR 1926.1400.**

2. **ADJUSTMENT**: Attempt to turn the Cap Screw by a clock-wise rotation. If by application of reasonable force you are unable to rotate the Cap Screw, heat may be required to break the chemical bond of a thread sealant applied at the factory. If by this rotation you encounter a dead stop i.e. threads bottom-out and the gap is not filled by protrusion of the Delrin© Plug, a new plug must be inserted, see step (3). Otherwise, go to step (4).

3. **REPLACEMENT**: Remove Cap Screw and insert a new Delrin© Plug into the Wear Plug Housing. A portion of the old plug may still be present. This residual portion of the former plug should remain in the Wear Plug Housing. If by inserting the new plug, you are unable to engage the threads of the Cap Screw and Wear Plug Housing, it will be necessary to reduce the length of the new plug by removing a portion sufficient to allow placement into the Wear Plug Housing and to engage the Cap Screw threads. **CAUTION:** for proper thread engagement, the end of the Cap Screw should not extend outside of a plane constituting the outbound end surface of the Wear Plug Housing. After satisfying yourself that the appropriate amount of trim has been removed (as necessary) sufficient to allow proper engagement of the threads, rotate the Cap Screw until tight

4. Remove the Cap Screw and apply to the surface of the threads **LOCTITE 262 Thread Locker** (follow manufacturers directions). The Cap Screw should then be reinserted and tightened (clock-wise rotation) until snug). The sealant will cure within a few minutes.

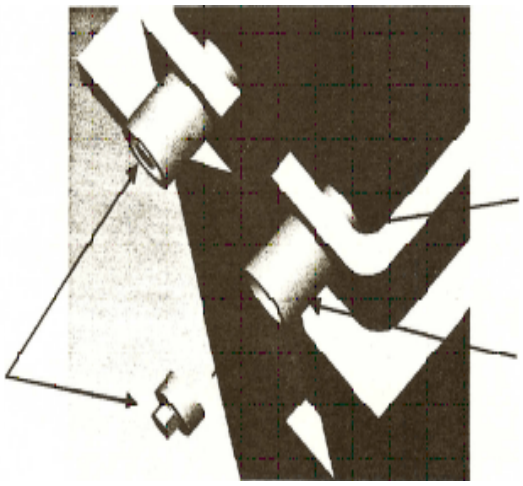

Fig. No 1

SAFETY & WARNING LABELS

LABELS PLACED BY THE MANUFACTURER

Cleasby Conveyors, Inc., places a number of warning labels on the conveyor and turntable to warn of dangers and to remind operators of correct operating procedures. **Note: The warning labels contain important warning information. Keep them visible and do not remove them.**

Instruct operators to review the warning labels daily as they start to make their deliveries. This daily review of safety precautions will help our operators be more safety conscious, reducing hazards to themselves and others.

Use care when cleaning the equipment to avoid damage to the warning labels by strong solvents or steam. Mask each label carefully before painting the unit. If the labels become damaged or unreadable, replace them promptly.

LABELS TO BE PLACED BY YOU OR YOUR INSTALLER

1.) **Truck-Cab Labels**. In addition to labels pre-installed on the turntable and conveyor, (CM) provides a warning labels that must be placed on the dash of the truck. Mount these labels in clear view of the operator and protect them from damage as described above.

2.) **Truck-Bed Label**. Cleasby Conveyors, also provides five (5) warning labels that must be placed at certain locations on the truck bed (see WARNINGS AND CAUTIONS, Section One). These labels are 5 3/8 inches in width, so if the truck bed on which you are installing the conveyor is not thick enough to allow for good placement of these labels, mounting brackets are available from the manufacturer, see note below.

DIAGRAMS

SECTION ONE contains diagrams of where (CM) has pre-installed labels on the turntable and the conveyor; and facsimile of the labels themselves. The left-hand page in each instance contains the placement diagram. Arrows on the diagram designate each label's identification number and its location on the equipment. The right-hand page in each instance contains representations of the various labels, and approximate placement on the equipment relative to each other.

Clearer representations of each label appear in numerical order following the diagrams noted above, see SECTION SEVEN. These are shown at a fraction of actual size. At the time of delivery, and periodically thereafter, look at the equipment with this manual in hand, checking each label in turn until you are satisfied that all labels are properly positioned as specified in the manual.

NOTE

Additional labels and truck bed mounting brackets are available free of charge. Call your local dealer or distributor. If there is no dealer or distributor in your area, please call (CM) at (800) 453-2446.

SECTION 5
PARTS IDENTIFICATION

TRUCK-MOUNTED CONVEYORS

FBR-FIBERGLASS SERIES
TURNTABLES- RTH 3000, RTH 4000,
RTH 6000

CONVEYOR PARTS. . . . . .
TURNTABLE PARTS . . . . . .

362 South Main, Clearfield, UT 84015
801-773-1311 * 800-453-2446 * Fax 801-773-8608

Cleasby Conveyors (Rev. 08/14/12)

FBR-6 CONVEYOR PARTS IDENTIFICATION

ITEM#	PART #	DESCRIPTION
1	20TC	4" BOLTON CLEAT WITH BOLTS
1A	20TF	FANG BOLT FOR 4" BOLT ON CLEAT
2	101FB	LOADING GUARD WITH DECALS
3	102FB	TAIL END SIDE PLATE WITH LOADING STRIP/FBR
4	103FB	SUPPORT LEG ASSEMBLY COMPLETE
4A	103AFB	SUPPORT LEG ONLY (NO MNTG BRACKET)
4B	103BFB	MOUNTING BRACKET ONLY FOR SUPPORT LEG
4C	06DG	ADJUSTABLE PIN FOR SUPPORT LEG
4D	19EE	FOOT PLOT ONLY W/RUBBER FOR SUPPORT LEG
5	104FB	1 1/4"KEYED DRIVE SHAFT
6	105FB	SPACER KIT FOR 1 1/4"DRIVE SHAFT (3PCS)
7	106FB	8" RUBBER WHEEL FOR DRIVE SHAFT
8	107FB	3/4" SHAFT FOR TAIL PULLEY
9	108FB	SPACER KIT FOR 3/4" TAIL PULLEY SHAFT (3PCS)
10	109FB	8" PLASTIC WHEEL FOR TAIL PULLEY
10A	109AFB	TEFLON BUSHING FOR TAIL PULLEY WHEEL
11	110FB	PLASTIC TAIL RAMPS WITH BOLTS
12	111FB	TAIL END SUPPORT BAR
13	112FB	1/4" SPLICE PLATE FOR TAIL END ASSEMBLY
14	113FB	METAL HEADBOARD PROTECTOR PLATE 3/16"
15	114FB	3/8" SPLICE PLATE FOR TAIL ENDASSEMBLY
16	13BB	HYDRAULIC MOTOR FOR BELT (TBD195)
16A	13BBA	SEAL KIT FOR HYDRAULIC MOTOR FOR BELT
17A	115FB	3/8" MRO FITTING
17B	116FB	½ "X 3/8"STEEL BUSHING
17C	140FB	BULKHEAD FITTING FOR HYDRAULIC HOSES
18	18LB	ROLLER CHAIN (#60) WITH MASTER (30" LONG)
19	18MA	MASTER LINK(#60)
19A	L-18ACC	HALF LINK (#60)
20	17DA	60B10 X 1"SPROCKET WITH KEY
21	17DE	60B24 X 1 1/4"SPROCKET WITH KEY
23	118FB	TAKE-UP ASSEMBLY COMPLETE
23A	119FB	INNER TAKE-UP PLATE
23B	120FB	MIDDLETAKE-UP PLATE
23C	121FB	OUTER TAKE-UP PLATE
23D	122FB	ADJUSTING ROD FOR TAKE-UPS W/NUTS
24	16BF	MSTU-62 FLANGETTE WITH ADJUSTER BOLT
25	123FB	SM-8 SELECTOR VALVEWITH KNOB
25A	123AFB	SEAL KIT FOR SM-8 SELECTOR VALVE
25B	12CE	KNOB ONLY FOR SELECTOR VALVE

Cleasby Conveyors of Utah
362 South Main St., Clearfield, UT. 84015
801-773-1311 * 800-453-2446 * FAX 801-773-8608

FBR-6 CONVEYOR PARTS IDENTIFICATION

ITEM#	PART#	DESCRIPTION
26	141FB	CHAIN & SPROCKET GUARD WITH DECALS
27	124FB	NOSE LOOP FOR END OF CONVEYOR
27A	124AFB	ADJUSTER BOLT BRACKET FOR NOSE LOOP
28	16AFA	11/4" BEARING WITH FLANGETTE
30	125FB	DRIVE END FRAME PLATE FOR DRIVE DRUM
31	126FB	TAIL END CROSS T-FRAME WIRETURN ROLLERS
31A	127FB	TAILEND CROSS T-FRAME ONLY
32	128FB	3" FIBERGLASS CHANNEL GUIDE FOR BELT *1* FT.
33	129FB	SUPPORT FRAME WITH RETURN ROLLER &BRACKET
33A	130FB	SUPPORT FRAME ONLY
33B	131FB	BRACKET ONLY FOR RETURN ROLLER
33C	132FB	1 1/2" X 2 1/2" RETURN ROLLER ONLY WIPIN & COTTER
33D	132AFB	COMPLETE RETURN ROLLER & BRACKET
34	133FB	2" X 1" X 6" UMHW TRACKING ANGLE WITH BOLTS
35	134FB	INSTRUCTION TUBE WITH END CAPS
35A	134AFB	PLASTIC END CAPS FOR INSTRUCTION TUBE
36	135FB	HYDRAULIC HOSE CLAMP WITH BOLTS
37	136FB	COMPLETE BELT WICLEATS (CALL FOR QUOTE)
38	20KA	375 X 16" SPLICE KIT FOR BELT
38A	20KC	SPLICE CABLE ONLY WIWASHERS FOR 16" BELT
39	137FB	NONCONDUCTIVE HYDRAULIC HOSE KIT (SPEC LGTH)
39A	137AFB	32" NONCOND. HYD. HOSE TO VALVE &MOTOR (EA)
41	139FB	COMPLETE NUT AND BOLT KIT FOR FBR
42	142FB	COMPLETE DRIVE DRUM (WHEEL, SHAFT, SPACER)
43	143FB	COMPLETE TAIL PULLEY (WHEEL, SHAFT, SPACER)
44	144FB	TORSION BOX FOR CONVEYOR FRAME
45	29QFA	½ " X 12" METAL LOADING STRIP
46A	148FB	BRONZE BUSHING KIT FOR SADDLE PIN *(11/4')*
46	01CGC	1 1/4″ X 14" SADDLE PIN
47	145FB	10' SADDLE FOR FBR CONVEYOR (36' OR LESS)
47A	146FB	15' SADDLE FOR FBR CONVEYOR (40' TO 41)
47B	145AFB	12' SADDLE FOR FBR CONVEYOR (38)
48	147FB	10" FIBERGLASS CHANNEUPER FT.
	22ZBA	COMPLETE DECAL KIT FOR FBR CONVEYOR

Cleasby Conveyors of Utah
362 South Main St., Clearfield, UT. 84015
801-773-1311 * 800-453-2446 * FAX 801-773-8608

CLEASBY CONVEYORS
PARTS INDENTIFICATION
FBR SERIES/DRIVE END
11-03-05

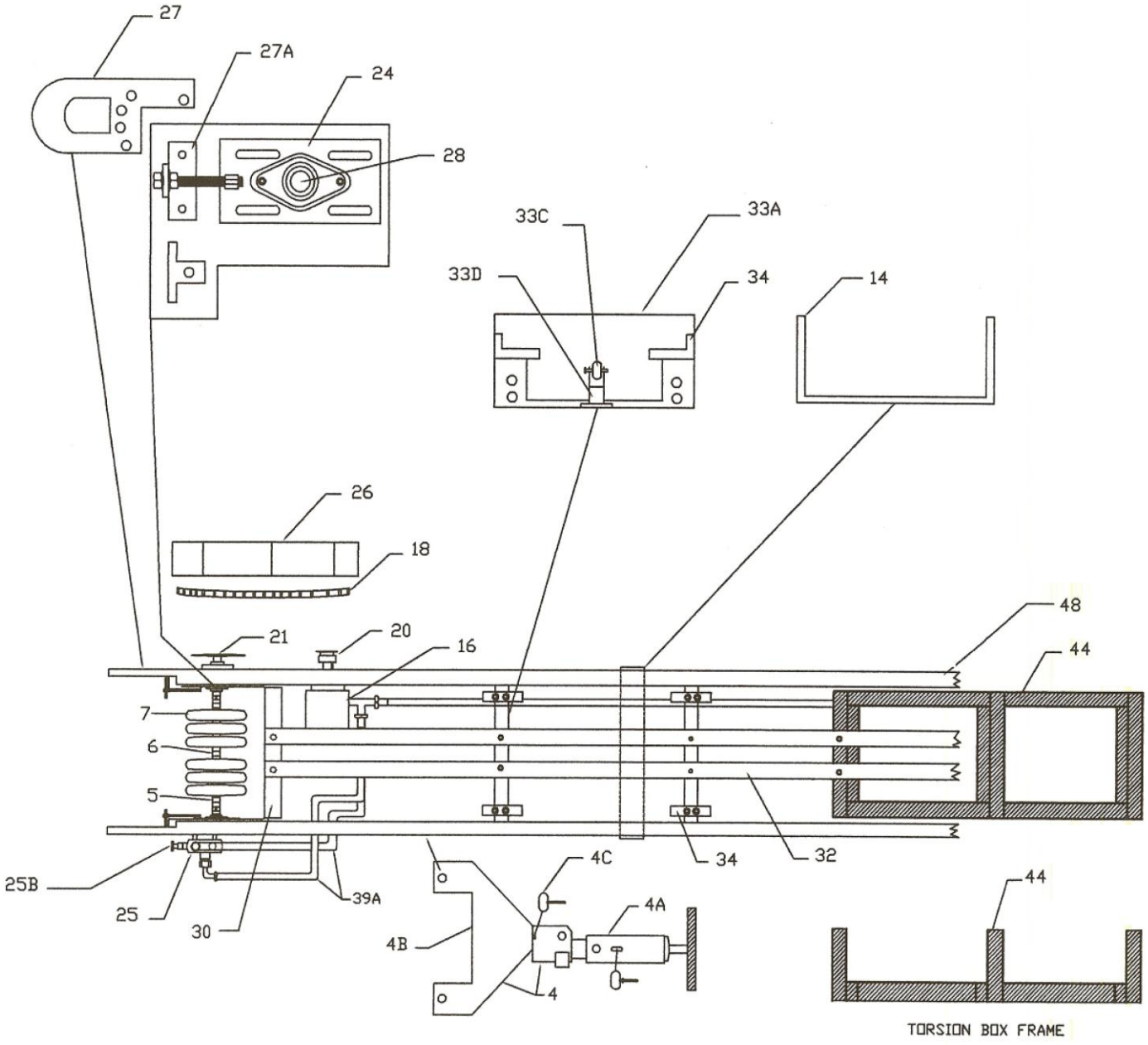

CLEASBY CONVEYORS
362 South Main, Clearfield, UT 84015
801-773-1311 * 800-453-2446 * Fax 801-773-8608

CLEASBY CONVEYORS
PARTS INDENTIFICATION
FBR SERIES/TAIL END
11-03-05

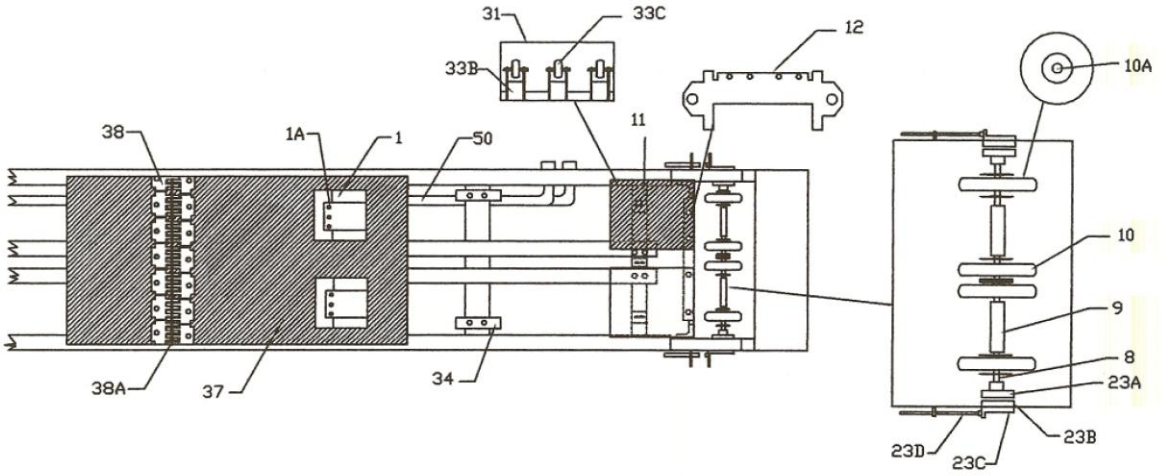

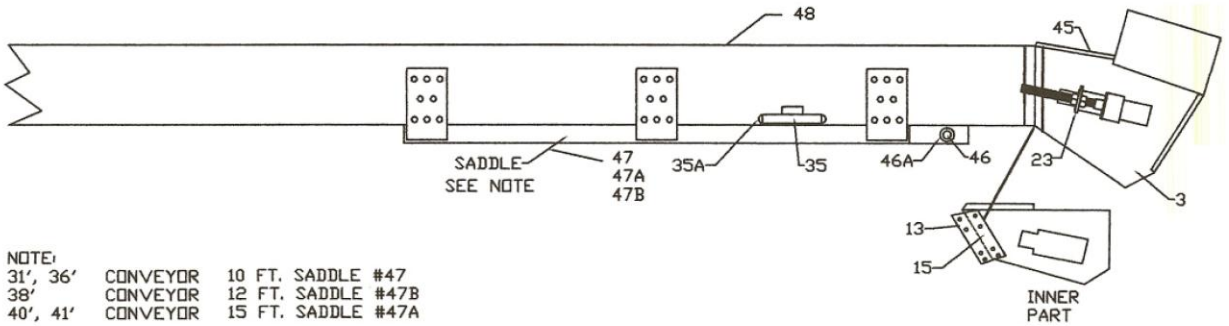

NOTE:

31', 36'	CONVEYOR	10 FT. SADDLE #47
38'	CONVEYOR	12 FT. SADDLE #47B
40', 41'	CONVEYOR	15 FT. SADDLE #47A

CLEASBY CONVEYORS
362 S. MAIN, CLEARFIELD, UT 84015
801-773-1311 * 800-453-2446 * FAX 801-773-8608

RTH-6000 SERIES PARTS IDENTIFICATION

ITEM#	PART#	DESCRIPTION
1	14DCA	1" DIAMETER CYLINDER PIN
2	14BE	4 X 24 CYLINDER
3	14EA	CLEVIS FOR 4 X 24 CYLINDER
4	14CC	9400 PACKING KIT FOR 4 X 24 CYLINDER
13	05FL	1/4" X 3 ½ " HEX BOLT
14	03BKA	BASE PLATE WITH BOLT CIRCLE (3/4" X 36 X 42)
14A	04BKA	BASE PLATE WITH BOLT CIRCLE (1 1/4" X 36 X 42)
15	12MA	FOUR SPOOL HYDRAULICVALVEWITH HANDLES
15A	12MT	SEAL KIT FOR INDIVIDUALSPOOL (4 USED)
15B	12MU	SPRING KIT FOR 4-SPOOL VALVE
15C	12MV	DETENT KIT FOR 4-SPOOL VALVE
15D	12MZ	SPOOL ONLY FOR 4-SPOOL VALVE
16	120B	STANDARD HANDLE (SPECIFY FUNCTION)
17	120E	ROTATION HANDLE
18	12QB	PLASTIC CAP FOR VALVEHANDLE
19	12PA	STANDARD HOUSING
20	12PB	ROTATION HOUSING
20A	12PC	RUBBER BOOT ONLY FOR HOUSING
21	5NCA	VALVEGUARD WITH DECALS
22	19MB	22" O.D. GEARED BEARING (1/2 " BOLT PATTERN 2640.00)
23	23AFAA	15 TOOTH PINION GEAR (SPECIFY RTH OR G9RL)
24	14GA	HYDRAULIC SWIVEL
24A	14GB	SWIVEL SEAL KIT
24B	10EQA	HYDRAULIC FITTING FOR BOTTOM OF SWIVEL
24C	29BCS	PLASTIC SWIVEL CAP
24D	14GE	SWIVEL MOUNTING BRACKET
25	12MG	CROSS PORT MANIFOLD FOR OLD BRAKE MOTOR
25A	12MH	MANIFOLD RELIEF CARTRIDGE FOR CROSS PORT
25B	12MI	MANIFOLD WASHER WITH O-RING
26	19Q5	8" OUTER TUBE AND PLATE
27	19QQ	6" INNER POST TUBE
28	14AB	TELESCOPIC INNER POST CYLINDER
28A	14AC	SEAL KIT FOR TELESCOPIC CYLINDER
28B	01CEV	1" X 3 1/4" CLEAVES PIN FOR BOTTOM OF T-CYLINDER
28C	01CEU	PIVOT EAR FOR BOTTOM OF T-CYLINDER
29	01CER	1" X 6 W' TOP POST PIN WIWASHER &COTTER
30	01CES	1" X 8 5/8" BOTTOM PIN WIWASHER &COTTER
31	01CET	1" X 17/8" MIDDLE PIN (2 USED) WIWASHER &COTTER
32	19GAA	GEAR BOX DRIVE WITH HYD MOTOR AND PINION GEAR
32A	131CM	HYDRAULIC MOTOR FOR GEAR BOX
32AB	13TGA	GEAR BOX ONLY COMPLETE WITH PINION GEAR
32B	13BAA	SEAL KIT FOR HYDRAULIC MOTOR FOR GEAR BOX
32C	13TGB	SEAL KIT FOR GEAR BOX
32D	03AHB	ADAPTER PLATE FOR GEAR BOX ON RTH TURNTABLE
32DA	04AHB	GASKET FOR COVER PLATE ON GEAR BOX

Cleasby Conveyors of Utah
362 South Main St., Clearfield, UT. 84015
801-773-1311 * 800-453-2446 * FAX 801-773-8608

RTH-6000 SERIES PARTS IDENTIFICATION

PAGE 2

ITEM#	PART#	DESCRIPTION
32E	13THG	RELIEF PLUG ONLY FOR GEARBOX
32F	13THF	RELIEF PLUG WITH BUSHING FOR GEAR BOX
32G	13BE	SEAL KIT FOR BRAKE MOTOR (OLD STYLE)
32H	13BF	W' X 6" NF BOLTS W/NUTS FOR BRAKE MOTOR
33	19QR	7" MIDDLE POST TUBE
34	12AA	RD-150 SPEED CONTROL
34A	12MCE	SEAL KIT FOR SPEED CONTROL
35	06BA	1/4"-28 X 11/8" GREASE ZIRK
36	29KA	0-3000 LB. PRESSURE GAUGE
36A	10EZ	1/4" CD 1/4" M X 1/4" F ELBOW
37	19TXA	MOUNTING KIT FOR TURNTABLE (STUDS & BLOCKS)
37A	19TXC	MOUNTING BOLT ONLY FOR TURNTABLE
38	14GC	SWIVEL BAR WITH BOLTS AND SPACERS
39	19ZY	STEEL WEAR STRIP FOR INNER POST (EA) (OLD STY)
39A	19WA	BRASS WEAR STRIP KIT WITH BOLTS (OLD STYLE)
39B	19FGA	WEAR PLUG KIT COMPLETE (HOUSING,CAPS,PLUGS)
39C	091NA	CAP ONLY FOR WEAR PLUG
39D	25DBAA	WEAR PLUG ONLY (TEFLON)
39E	09CNA	HOUSING ONLY FOR WEAR PLUG
40	12PD	RELIEF CARTRIDGE FOR 4-SPOOL VALVE
41	12AB	CHECK VALVE FOR INNER POST CYLINDER
42	12FB	VELOCITY FUSE FOR CONVEYOR CYLINDER
42A	12FC	HOSE FROM 4-SPOOL VALVE TO VELOCITY FUSE
42B	12FD	1/32" RESTRICTED ORIFICE
43	14GD	½ " X 90 HYD HOSE OFF SWIVEL TO 4-SPOOL VALVE
44	14GI	1/4" HYD. HOSE FROM INNER CYL. TO CHECK VALVE
45	14GH	COMPLETE HOSE KIT FOR RTH-6000
46	29KB	SIGHT GAUGE FOR HYDRAULIC RESERVOIR
47	13AG	DIRECT DRIVE PUMP & RESERVOIR
48	13AH	DIRECT DRIVE PUMP ONLY
48A	13AHB	SEAL KIT FOR DIRECT DRIVE PUMP
49	13AJ	RESERVOIR 15 GALLON FOR DIRECT DRIVE PUMP
49A	13AJA	REPLACEABLE FILTER FOR 15 GALLON RESERVOIR
49B	13AK	CAP FOR 15 GALLON RESERVOIR
49C	13AJD	GASKET FOR 15 GALLON RESERVOIR
50	13AE	F-98 PUMP & RESERVOIR (OLD STYLE)
51	13AF	F-98 PISTON PUMP ONLY (OLD STYLE)
51A	13AFA	SEAL KIT FOR F-98 PUMP
51B	13ABJ	GASKET FOR F-98 PUMP & RESERVOIR
52	19P5	MANUAL POST STOP FOR RTH-6000
53	11MZZ	BLUE HOSE COVER FOR HOSES ON 4-SPOOL VALVE
54	06DZA	U-BOLT CLAMP FOR HOSES ON POST OF TURNTABLE
55	01CGC	1 1/4" X 14" SADDLE PIN WITH COTTER

Cleasby Conveyors of Utah
362 South Main St., Clearfield, UT. 84015
801-773-1311 * 800-453-2446 * FAX 801-773-8608

CLEASBY CONVEYORS
RTH-6000 TURNTABLE
12-12-05

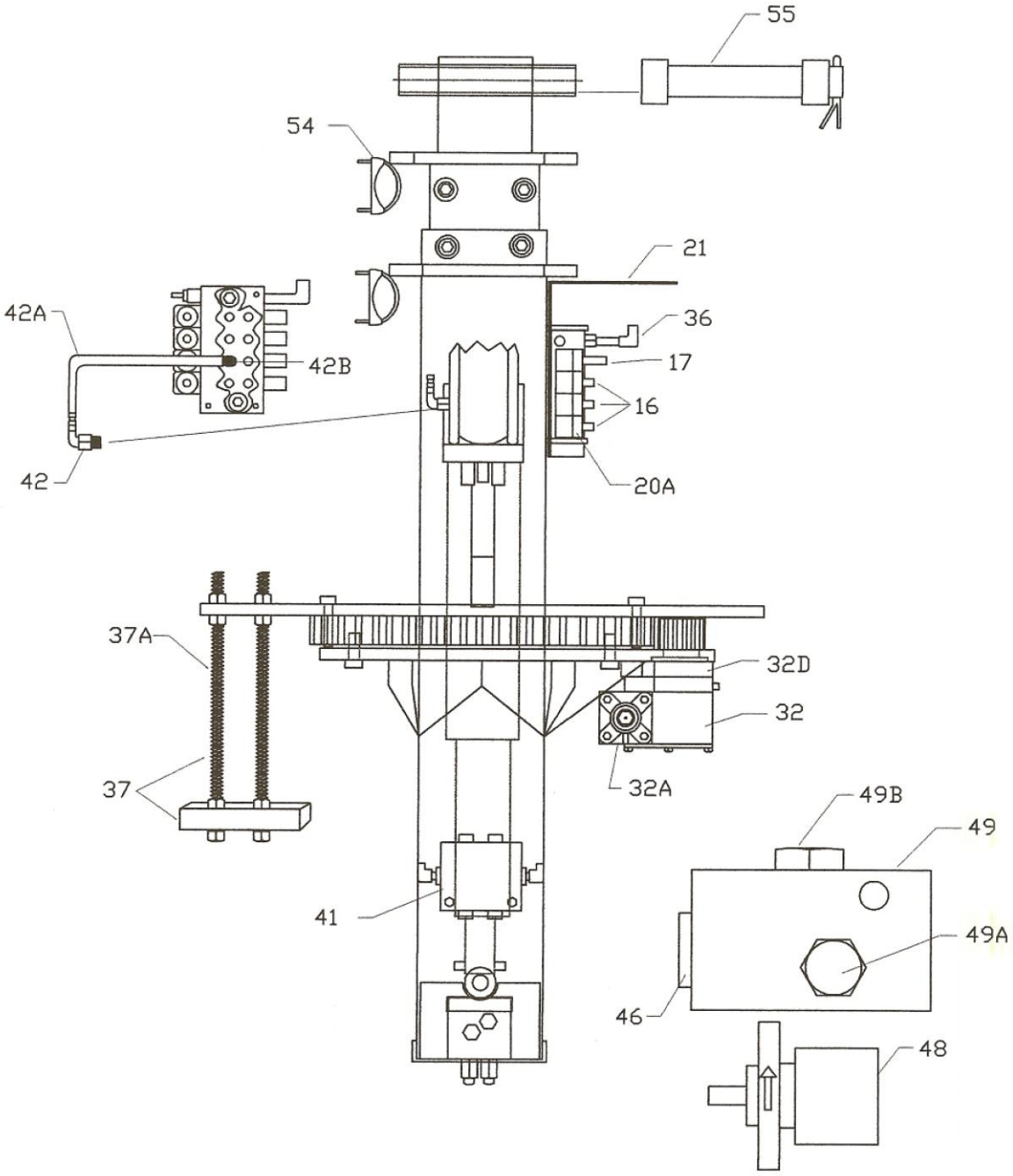

CLEASBY CONVEYORS
362 S. MAIN, CLEARFIELD,UT 84015
801-773-1311 * 800-453-2446 * FAX 801-773-8608

CLEASBY CONVEYORS
RTH-6000 TURNTABLE
12-12-05

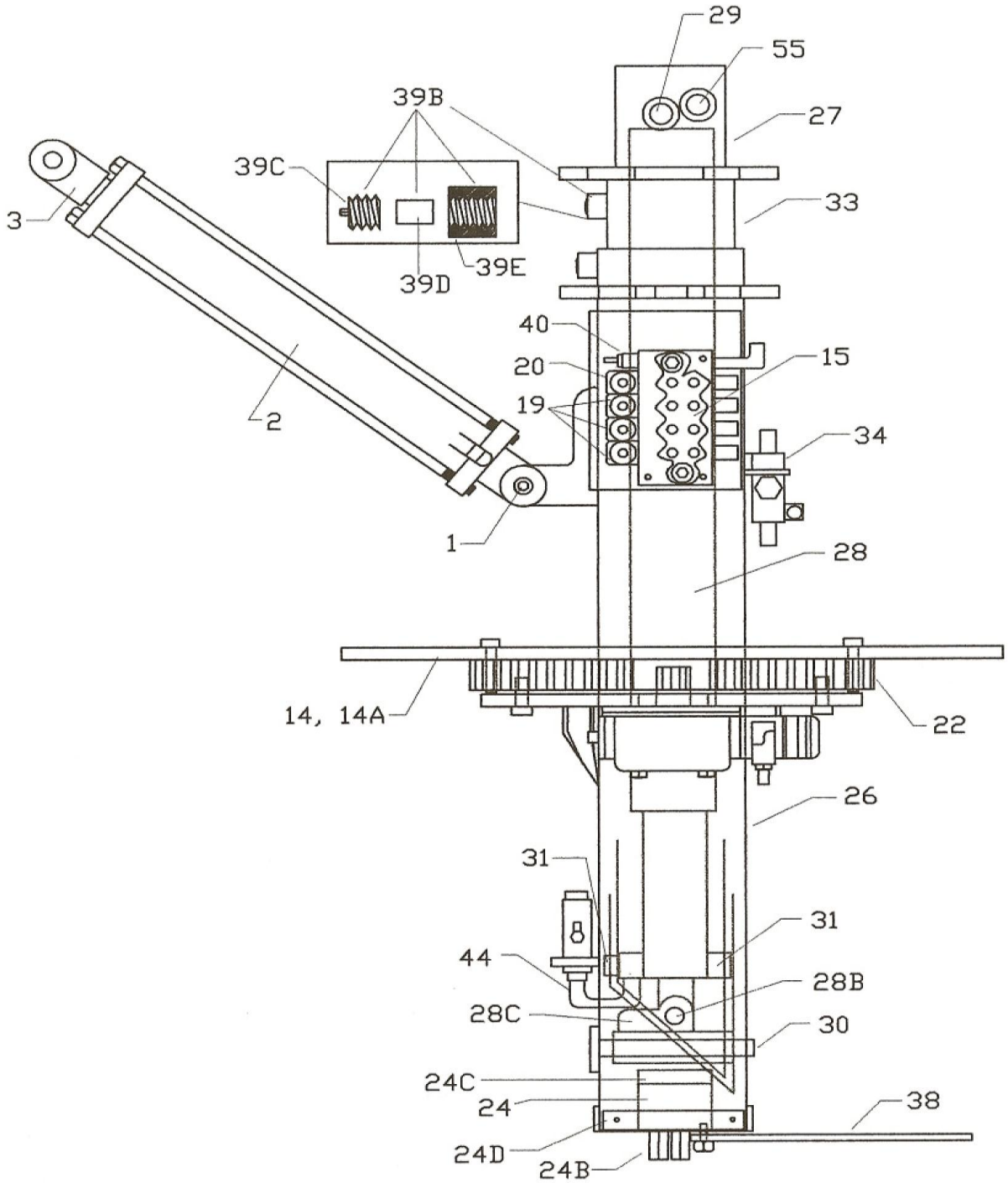

CLEASBY CONVEYORS
362 S. MAIN, CLEARFIELD,UT 84015
801-773-1311 * 800-453-2446 * FAX 801-773-8608

RTH-4000 SERIES PARTS IDENTIFICATION

PAGE 1

ITEM#	PART#	DESCRIPTION
1	14DCA	1"DIAMETER CYLINDER PIN
2	14BE	4 X 24 CYLINDER
3	14EA	CLEVIS FOR 4 X 24 CYLINDER
4	14CC	9400 PACKING KIT FOR 4 X 24 CYLINDER
13	05FL	1/4"X 3 ½ " HEX BOLT
14	03BKA	BASE PLATE WITH BOLT CIRCLE (3/4"X 36 X 42)
14A	04BKA	BASE PLATE WITH BOLT CIRCLE (11/4" X 36 X 42)
15	12MA	FOUR SPOOL HYDRAULIC VALVE WITH HANDLES
15A	12MT	SEAL KIT FOR INDIVIDUAL SPOOL (4USED)
15B	12MU	SPRING KIT FOR 4-SPOOL VALVE
15C	12MV	DETENT KIT FOR 4-SPOOL VALVE
15D	12MZ	SPOOL ONLY FOR 4-SPOOL VALVE
16	120B	STANDARD HANDLE (SPECIFY FUNCTION)
17	120E	ROTATION HANDLE
18	12QB	PLASTIC CAP FOR VALVE HANDLE
19	12PA	STANDARD HOUSING
20	12PB	ROTATION HOUSING
20A	12PC	RUBBER BOOT ONLY FOR HOUSING
21	5NCA	VALVE GUARD WITH DECALS
22	19MB	22" O.D. GEARED BEARING (1/2" BOLT PATTERN 2640.00)
23	23AFAA	15 TOOTH PINION GEAR (SPECIFY RTH OR G9RL)
24	14GA	HYDRAULIC SWIVEL
24A	14GB	SWIVEL SEAL KIT
24B	10EOA	HYDRAULIC FITTING FOR BOTTOM OF SWIVEL
24C	29BCS	PLASTIC SWIVEL CAP
24D	14GE	SWIVEL MOUNTING BRACKET
25	12MG	CROSS PORT MANIFOLD FOR OLD BRAKE MOTOR
25A	12MH	MANIFOLD RELIEF CARTRIDGE FOR CROSS PORT
25B	12MI	MANIFOLD WASHER WITH O-RING
26	19QU	8"OUTER POST AND PLATE (RTH-4000)
27	19QT	7" INNER POST TUBE (RTH-4000)
28	14BJ	3 X 48 INNER POST CYLINDER (RTH-4000)
28A	14CH	SEAL KIT FOR 3 X 48 INNER POST CTLINDER
29	01CEG	1"X 7 ½ " PIN WITH WASHER & COTTER
30	01CES	1"X 8 5/8" BOTTOM PIN WIWASHER & COTTER
32	19GAA	GEAR BOX DRIVE WITH HYD MOTOR AND PINION GEAR
32A	131CM	HYDRAULIC MOTOR FOR GEAR BOX
32AB	13TGA	GEAR BOX ONLY COMPLETE WITH PINION GEAR
32B	13BAA	SEAL KIT FOR HYDRAULIC MOTOR FOR GEAR BOX
32C	13TGB	SEAL KIT FOR GEAR BOX
32D	03AHB	ADAPTER PLATE FOR GEAR BOX ON RTH TURNTABLE
32DA	04AHB	GASKET FOR COVER PLATE ON GEAR BOX

Cleasby Conveyors of Utah
362 South Main St., Clearfield, UT. 84015
801-773-1311 * 800-453-2446 * FAX 801-773-8608

RTH-4000 SERIES PARTS IDENTIFICATION

ITEM#	PART#	DESCRIPTION
32E	13THG	RELIEF PLUG ONLY FOR GEAR BOX
32F	13THF	RELIEF PLUG WITH BUSHING FOR GEAR BOX
32G	13BE	SEAL KIT FOR BRAKE MOTOR (OLD STYLE)
32H	13BF	½ " X 6" NF BOLTS W/NUTS FOR BRAKE MOTOR
34	12AA	RD-150 SPEED CONTROL
34A	12MCE	SEAL KIT FOR SPEED CONTROL
35	06BA	1/4"-28 X 1 1/8" GREASE ZIRK
36	29KA	0-3000 LB. PRESSURE GAUGE
36A	10EZ	1/4" CD 1/4" MX 1/4" F ELBOW
37	19TXA	MOUNTING KIT FOR TURNTABLE (STUDS & BLOCKS)
37A	19TXC	MOUNTING BOLT ONLY FOR TURNTABLE
38	14GC	SWIVEL BAR WITH BOLTS AND SPACERS
39	19ZV	STEEL WEAR STRIP FOR INNER POST (EA) (OLD STY)
39A	19WB	BRASS WEAR STRIP KITWITH BOLTS (OLD STYLE)
39B	19TGB	WEAR PLUG KIT COMPLETE (HOUSING,CAPS,PLUGS)
39C	091NA	CAP ONLY FOR WEAR PLUG
39D	25DBAA	WEAR PLUG ONLY (TEFLON)
39E	09CNA	HOUSING ONLY FOR WEAR PLUG
40	12PD	RELIEF CARTRIDGE FOR 4-SPOOL VALVE
41	12AB	CHECK VALVE FOR INNER POST CYLINDER
42	12FB	VELOCITY FUSE FOR CONVEYOR CYLINDER
42A	12FC	HOSE FROM 4-SPOOL VALVETO VELOCITY FUSE
42B	12FD	1/32" RESTRICTED ORIFICE
43	14GD	1/2 " X 90 HYD HOSE OFF SWIVEL TO 4-SPOOL VALVE
44	14GI	1/4" HYD. HOSE FROM INNER CYL. TO CHECK VALVE
45	14GK	COMPLETE HOSE KIT FOR RTH-4000
46	29KB	SIGHT GAUGE FOR HYDRAULIC RESERVOIR
47	13AG	DIRECT DRIVE PUMP &RESERVOIR
48	13AH	DIRECT DRIVE PUMP ONLY
48A	13AHB	SEAL KIT FOR DIRECT DRIVE PUMP
49	13AJ	RESERVOIR 15 GALLON FOR DIRECT DRIVE PUMP
49A	13AJA	REPLACEABLE FILTER FOR 15 GALLON RESERVOIR
49B	13AK	CAP FOR 15 GALLON RESERVOIR
49C	13AJD	GASKET FOR 15 GALLON RESERVOIR
50	13AE	F-98 PUMP &RESERVOIR (OLD STYLE)
51	13AF	F-98 PISTON PUMP ONLY (OLD STYLE)
51A	13AFA	SEAL KIT FOR F-98 PUMP
51B	13ABJ	GASKET FOR F-98 PUMP &RESERVOIR
53	11MZZ	BLUE HOSE COVER FOR HOSES ON 4-SPOOL VALVE
54	06DZA	U-BOLT CLAMP FOR HOSES ON POST OF TURNTABLE
55	01CDC	3/4" X 3 ½ " PIN WITH WASHER &COTTER
56	01CGC	1 1/4" X 14" SADDLE PIN

Cleasby Conveyors of Utah
362 South Main St., Clearfield, UT. 84015
801-773-1311 * 800-453-2446 * FAX 801-773-8608

CLEASBY CONVEYORS
RTH-4000 TURNTABLE
12-12-05

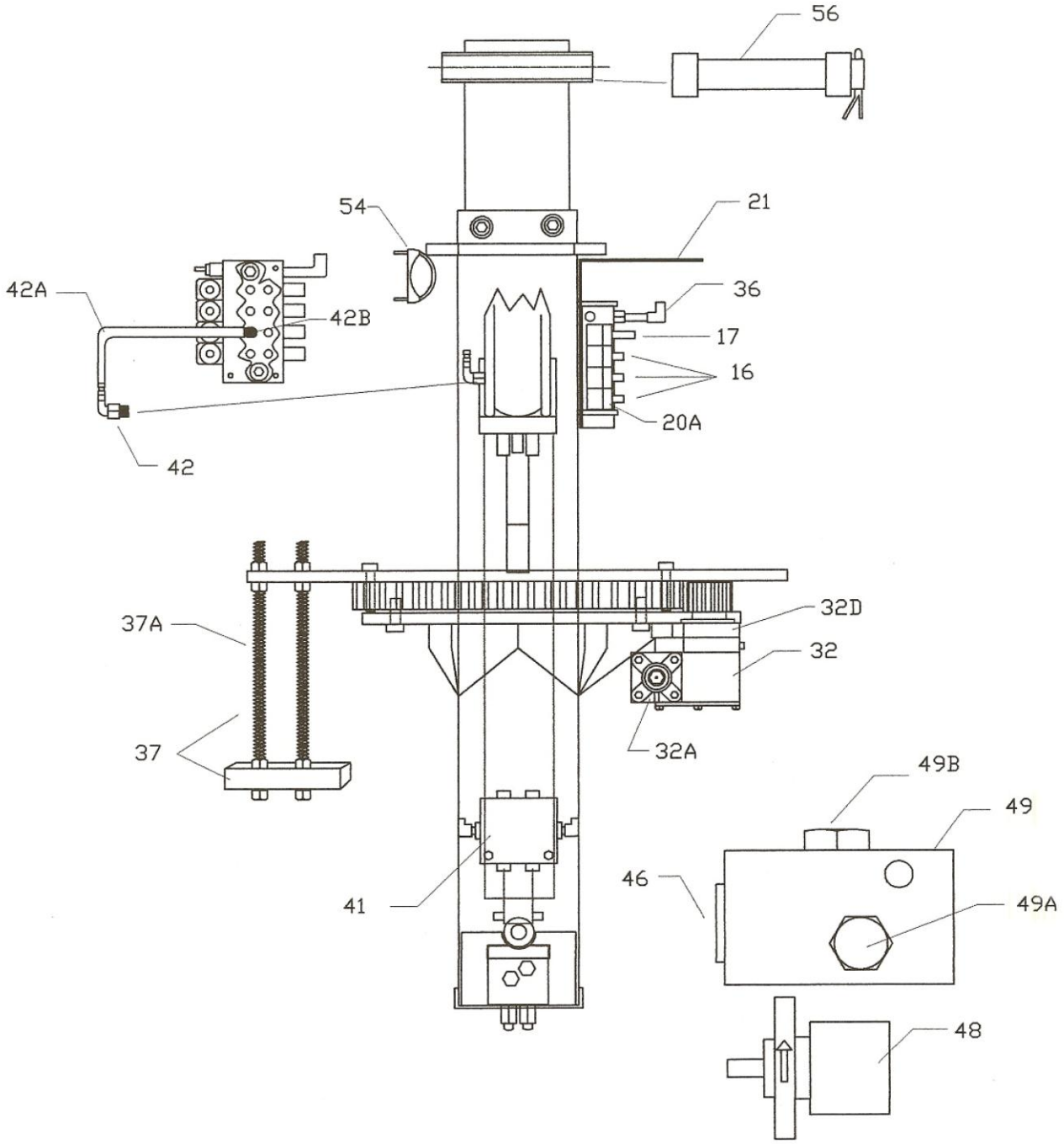

CLEASBY CONVEYORS
362 S. MAIN, CLEARFIELD,UT 84015
801-773-1311 * 800-453-2446 * FAX 801-773-8608

CLEASBY CONVEYORS
RTH-4000 TURNTABLE
12-12-05

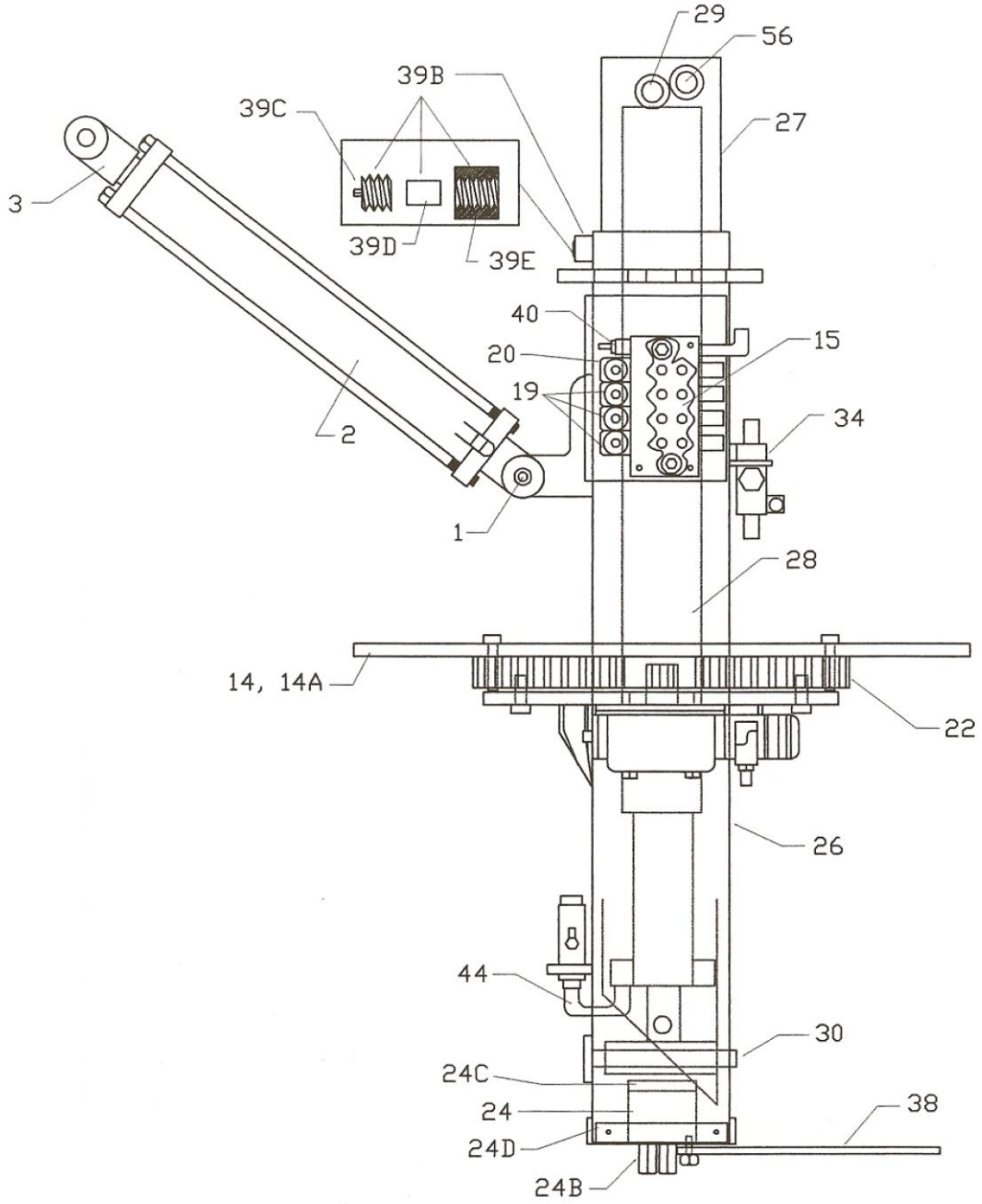

CLEASBY CONVEYORS
362 S. MAIN, CLEARFIELD,UT 84015
801-773-1311 * 800-453-2446 * FAX 801-773-8608

RTH-3000 SERIES PARTS IDENTIFICATION

ITEM #	PART#	DESCRIPTION
1	14DCA	1" DIAMETER CYLINDER PIN
2	14BE	4 X 24 CYLINDER
3	14EA	CLEVIS FOR 4 X 24 CYLINDER
4	14CC	9400 PACKING KIT FOR 4 X 24 CYLINDER
13	05FL	1/4" X 3 ½ " HEX BOLT
14	03BKA	BASE PLATE WITH BOLT CIRCLE (3/4" X 36 X 42)
14A	04BKA	BASE PLATE WITH BOLT CIRCLE (1 1/4" X 36 X 42)
15	12MA	FOUR SPOOL HYDRAULIC VALVE WITH HANDLES
15A	12MT	SEAL KIT FOR INDIVIDUAL SPOOL (4 USED)
15B	12MU	SPRING KIT FOR 4-SPOOL VALVE
15C	12MV	DETENT KIT FOR 4-SPOOL VALVE
15D	12MZ	SPOOL ONLY FOR 4-SPOOL VALVE
16	120B	STANDARD HANDLE (SPECIFY FUNCTION)
17	120E	ROTATION HANDLE
18	120B	PLASTIC CAP FOR VALVE HANDLE
19	12PA	STANDARD HOUSING
20	12PB	ROTATION HOUSING
20A	12PC	RUBBER BOOT ONLY FOR HOUSING
21	5NCA	VALVE GUARD WITH DECALS
22	19MB	22" O.D. GEARED BEARING (W' BOLT PATTERN 2640.00)
23	23AFAA	15 TOOTH PINION GEAR (SPECIFY RTH OR G9RL)
24	14GA	HYDRAULIC SWIVEL
24A	14GB	SWIVEL SEAL KIT
24B	10EOA	HYDRAULIC FITTING FOR BOTTOM OF SWIVEL
24C	29BCS	PLASTIC SWIVEL CAP
24D	14GE	SWIVEL MOUNTING BRACKET
25	12MG	CROSS PORT MANIFOLD FOR OLD BRAKE MOTOR
25A	12MH	MANIFOLD RELIEF CARTRIDGE FOR CROSS PORT
25B	12MI	MANIFOLD WASHER WITH O-RING
26	190W	8" OUTER POST AND PLATE (RTH-3000)
27	190V	7" INNER POST TUBE (TRH-3000)
28	14AA	3 X 36 INNER POST CYLINDER (RTH-3000)
28A	14CH	SEAL KIT FOR 3 X 36 INNER POST CTLINDER
29	01CEG	1" X 7 ½ " PIN WITH WASHER &COTTER
30	01CES	1" X 8 5/8" BOTTOM PIN WIWASHER & COTTER
32	19GAA	GEAR BOX DRIVE WITH HYD MOTOR AND PINION GEAR
32A	131CM	HYDRAULIC MOTOR FOR GEAR BOX
32AB	13TGA	GEAR BOX ONLY COMPLETE WITH PINION GEAR
32B	13BAA	SEAL KIT FOR HYDRAULIC MOTOR FOR GEAR BOX
32C	13TGB	SEAL KIT FOR GEAR BOX
32D	03AHB	ADAPTER PLATE FOR GEAR BOX ON RTH TURNTABLE
32DA	04AHB	GASKET FOR COVER PLATE ON GEAR BOX

Cleasby Conveyors of Utah
362 South Main, Clearfield, UT. 84015
801-773-1311 * 800-453-2446 * FAX 801-773-8608

RTH-3000 SERIES PARTS IDENTIFICATION

ITEM#	PART#	DESCRIPTION
32E	13THG	RELIEF PLUG ONLY FOR GEAR BOX
32F	13THF	RELIEF PLUG WITH BUSHING FOR GEAR BOX
32G	13BE	SEAL KIT FOR BRAKE MOTOR (OLD STYLE)
32H	13BF	W' X 6" NF BOLTS W/NUTS FOR BRAKE MOTOR
34	12AA	RD-150 SPEED CONTROL
34A	12MCE	SEAL KIT FOR SPEED CONTROL
35	06BA	1/4"-28 X 1 1/8" GREASE ZIRK
36	29KA	0-3000 LB. PRESSURE GAUGE
36A	10EZ	1/4" CD 1/4" MX 1/4" F ELBOW
37	19TXA	MOUNTING KIT FOR TURNTABLE (STUDS &BLOCKS)
37A	19TXC	MOUNTING BOLT ONLY FOR TURNTABLE
38	14GC	SWIVEL BAR WITH BOLTS AND SPACERS
39	19ZV	STEEL WEAR STRIP FOR INNER POST (EA)(OLD STY)
39A	19WB	BRASS WEAR STRIP KITWITH BOLTS (OLD STYLE)
39B	19FGB	WEAR PLUG KIT COMPLETE (HOUSING, CAPS, PLUGS)
39C	091NA	CAP ONLY FOR WEAR PLUG
39D	25DBAA	WEAR PLUG ONLY (TEFLON)
39E	09CNA	HOUSING ONLY FOR WEAR PLUG
40	12PD	RELIEF CARTRIDGE FOR 4-SPOOL VALVE
41	12AB	CHECK VALVEFOR INNER POST CYLINDER
42	12FB	VELOCITY FUSE FOR CONVEYOR CYLINDER
42A	12FC	HOSE FROM 4-SPOOL VALVETO VELOCITY FUSE
42B	12FD	1/32" RESTRICTED ORIFICE
43	14GD	½ " X 90 HYD HOSE OFF SWIVEL TO 4-SPOOL VALVE
44	14GI	1/4" HYD. HOSE FROM INNER CYL. TO CHECK VALVE
45	14GL	COMPLETE HOSE KIT FOR RTH-3000
46	29KB	SIGHT GAUGE FOR HYDRAULIC RESERVOIR
47	13AG	DIRECT DRIVE PUMP &RESERVOIR
48	13AH	DIRECT DRIVE PUMP ONLY
48A	13AHB	SEAL KIT FOR DIRECT DRIVE PUMP
49	13AJ	RESERVOIR 15 GALLON FOR DIRECT DRIVE PUMP
49A	13AJA	REPLACEABLE FILTER FOR 15 GALLON RESERVOIR
49B	13AK	CAP FOR 15 GALLON RESERVOIR
50	13AE	F-98 PUMP &RESERVOIR (OLD STYLE)
51	13AF	F-98 PISTON PUMP ONLY (OLD STYLE)
51A	13AFA	SEAL KIT FOR F-98 PUMP
51B	13ABJ	GASKET FOR F-98 PUMP &RESERVOIR
53	11MZZ	BLUE HOSE COVER FOR HOSES ON 4-SPOOL VALVE
54	06DZA	U-BOLT CLAMP FOR HOSES ON POST OF TURNTABLE
55	01CDC	3/4" X 3 ½ " PIN WITH WASHER &COTTER
56	01CGC	1 1/4" X 14" SADDLE PIN

Cleasby Conveyors of Utah
362 South Main, Clearfield, UT. 84015
801-773-1311 * 800-453-2446 * FAX 801-773-8608

CLEASBY CONVEYORS
RTH-3000 TURNTABLE
12-12-05

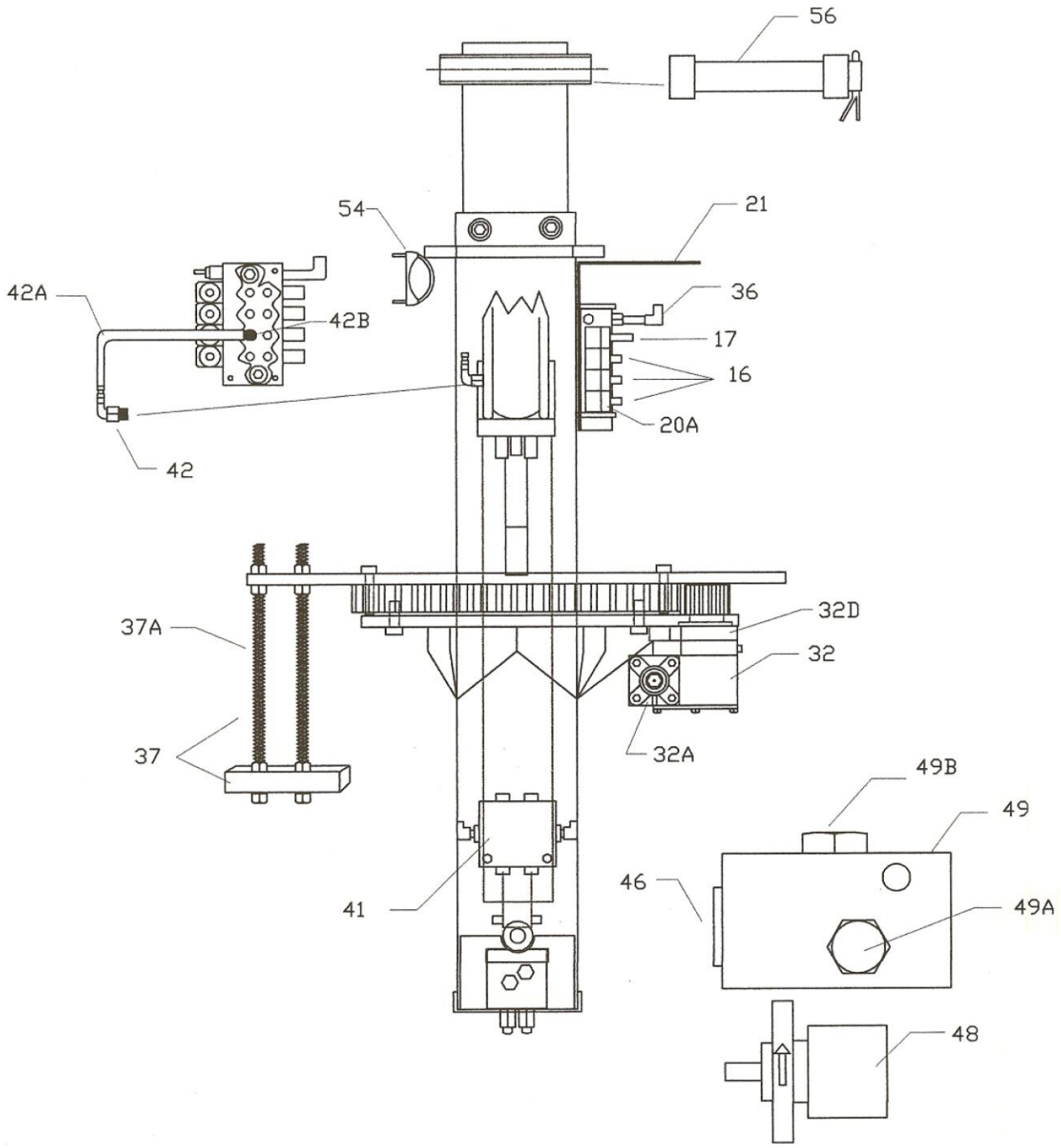

CLEASBY CONVEYORS
362 S. MAIN, CLEARFIELD,UT 84015
801-773-1311 * 800-453-2446 * FAX 801-773-8608

CLEASBY CONVEYORS
RTH-3000 TURNTABLE
12-12-05

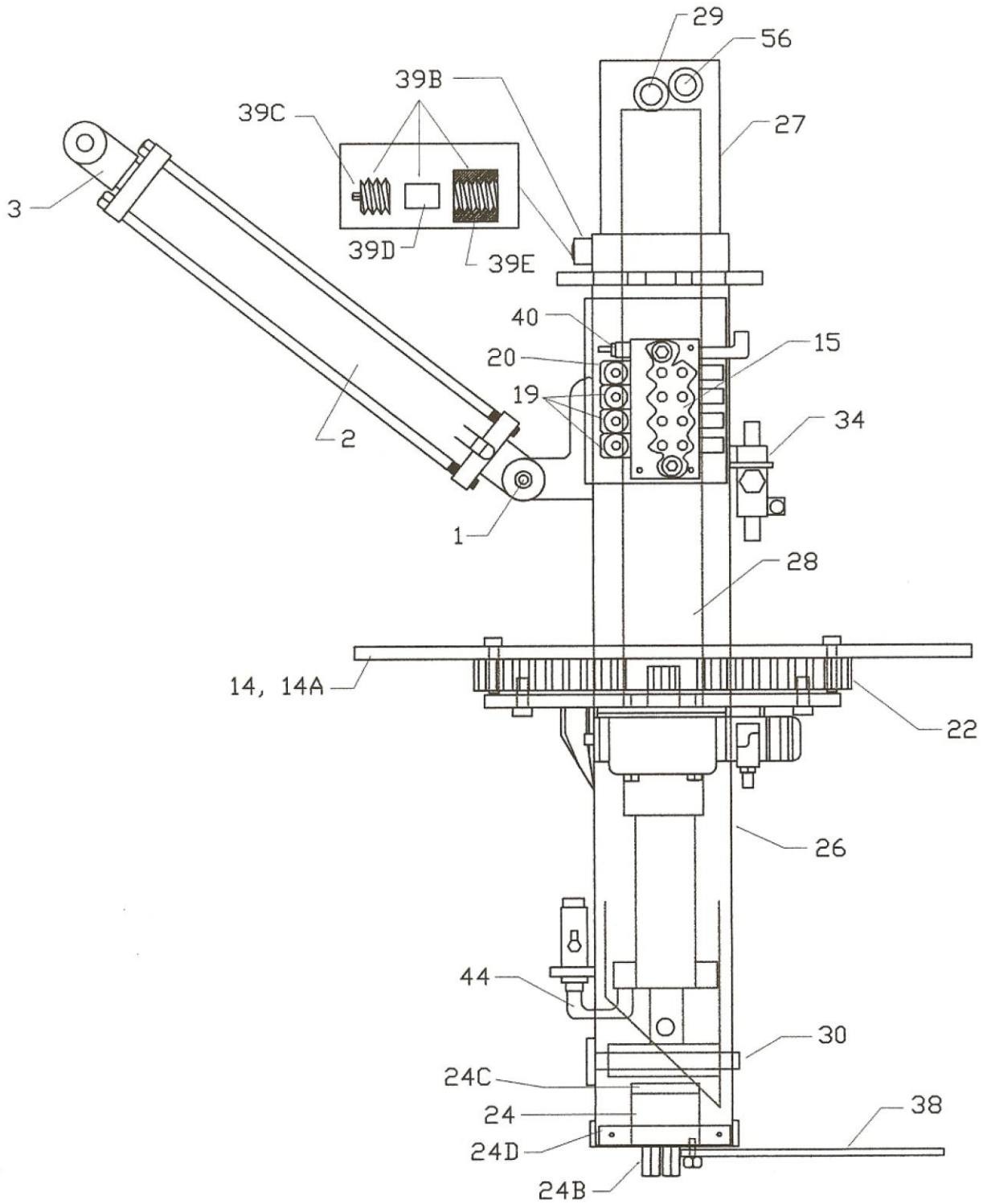

CLEASBY CONVEYORS
362 S. MAIN, CLEARFIELD,UT 84015
801-773-1311 * 800-453-2446 * FAX 801-773-8608

CLEASBY CONVEYORS
RTH TURNTABLE HOSE SCHEMATIC
11-16-05

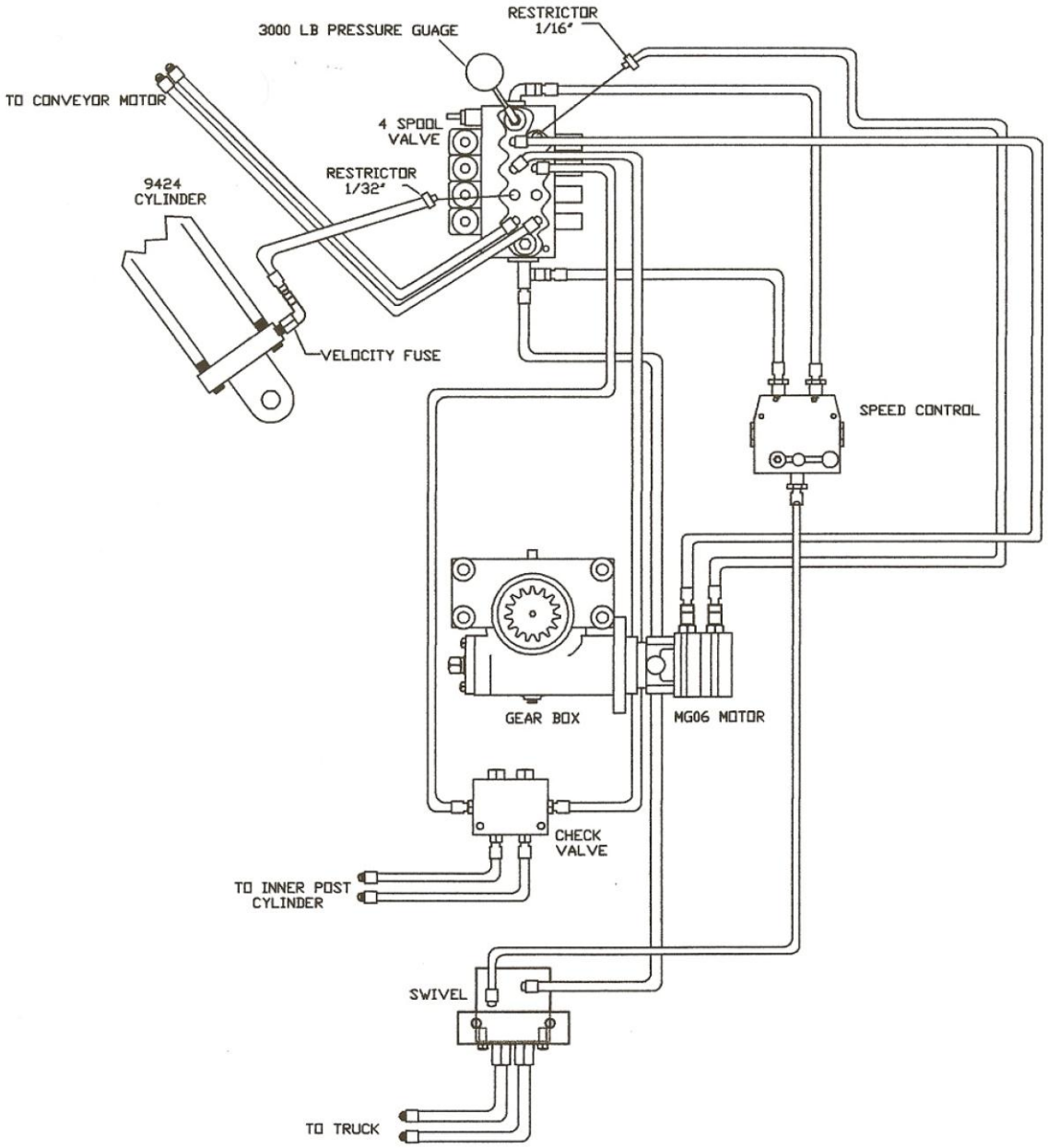

CLEASBY CONVEYORS
362 S. MAIN, CLEARFIELD, UT 84015
801-773-1311 * 800-453-2446 * FAX 801-773-8608

SECTION SIX
HYDRAULIC STABILIZERS

INTRODUCTION
INSTALLATION
- Stabilizer Frame Mounting 6-1
- Installing Stabilizer Legs and Cylinders 6-2
- Mounting the Control Valve 6-3
- Connecting Hydraulic Lines 6-4
- Testing the System 6-5

OPERATION
- Lowering the Stabilizers 6-5
- Retracting the Stabilizers 6-5

MAINTENANCE
- Daily Maintenance 6-6
- Weekly Maintenance 6-6
- Annual Maintenance and Preparation for Storage 6-6

PARTS LIST
- Cylinder Rigging Parts 6-7
- Stabilizer Assembly Parts 6-8

362 South Main, Clearfield, UT 84015
801-773-1311 * 800-453-2446 * Fax 801-773-8608

INTRODUCTION

Cleasby Conveyors, (CM) recommends stabilizers be installed on all trucks with mounted conveyors. Stabilizers provide (1) substantially improved stability under all conditions; (2) permit use of the conveyor when the ground is uneven; and (3) provide additional margins of safety against the truck tipping over. All of this adds up to safer operation and avoiding the possibility of injury or damage to equipment.

PLEASE READ AND FOLLOW THE INSTALLATION PROCEDURE BELOW

INSTALLATION

Stabilizer Frame Mounting

(See Figure 7-1)

1.) Remove and discard the two knock-out braces which were inserted for purposes of shipping.

2.) With the truck unloaded and located on level ground, slide the open end of the stabilizer frame upward over the truck chassis forward of the turntable post.

3.) Block-up the stabilizer frame with the slides vertical and the bottom of the frame approximately twelve (12) inches off the ground (this may vary depending upon the type of truck). The rear side of the frame should be 6 to 12 inches forward of the turntable post. Adjust position to avoid interference with attachments to the chassis frame. The bottom of the frame must be level in all directions.

4.) Weld the stabilizer frame to the chassis frame and to the bed frame, if possible, using full weld beads. Use eight beads with a minimum throat of 1/4 inch (See Figure 7-1).

(CM) recommends shielded arc welding to insure adequate penetration. If only MIG welding is available, use only at high heat. Only certified welders should perform welding.

5.) Let cool. Clean weld and paint as necessary.

6.) Select a highly visible spot in the vehicle cab, clean the area thoroughly and apply the warning label supplied, **(See Section One, Warnings and Cautions, Labels to Be Placed by you or the Installer).**

7.) Please see OSHA 29 CFR 1926.1400.

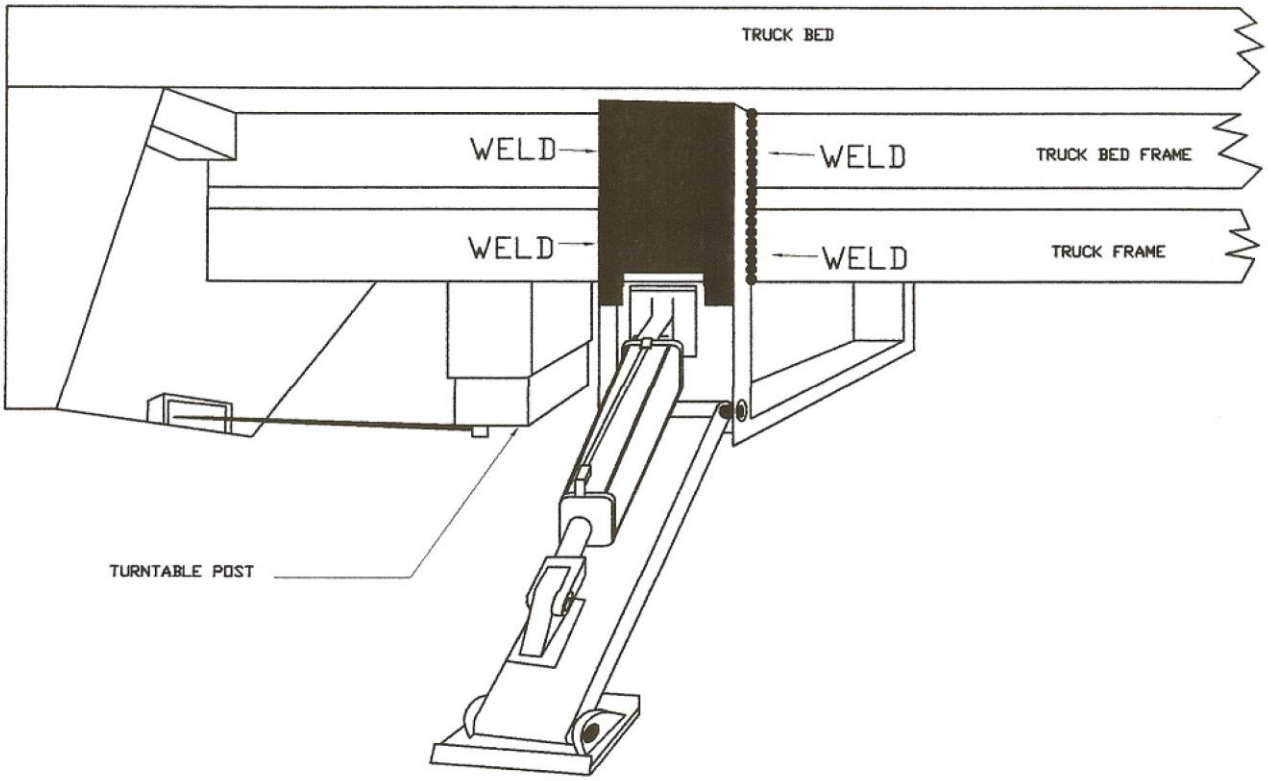

Installing Stabilizer Legs and Cylinders

1.) Connect the stabilizer legs to the stabilizer frame (See Figure 6-1, this page and Parts List, beginning hereafter) with straight 1"x 7 1/4 " pins. Place washers on each end of the pins and secure with cotter pins.

2.) Mount a stabilizer foot on each stabilizer leg with headed 1"x7" pins. Place a washer over the end of each of the pins and secure with cotter pins.

3.) Anchor the tube end of the cylinders to the stabilizer frame with the cylinder pins and secure with the hardened cotter pins provided.

4.) Connect the rod ends of the cylinders to the stabilizer legs with cylinder pins and secure with the hardened cotter pins provided.

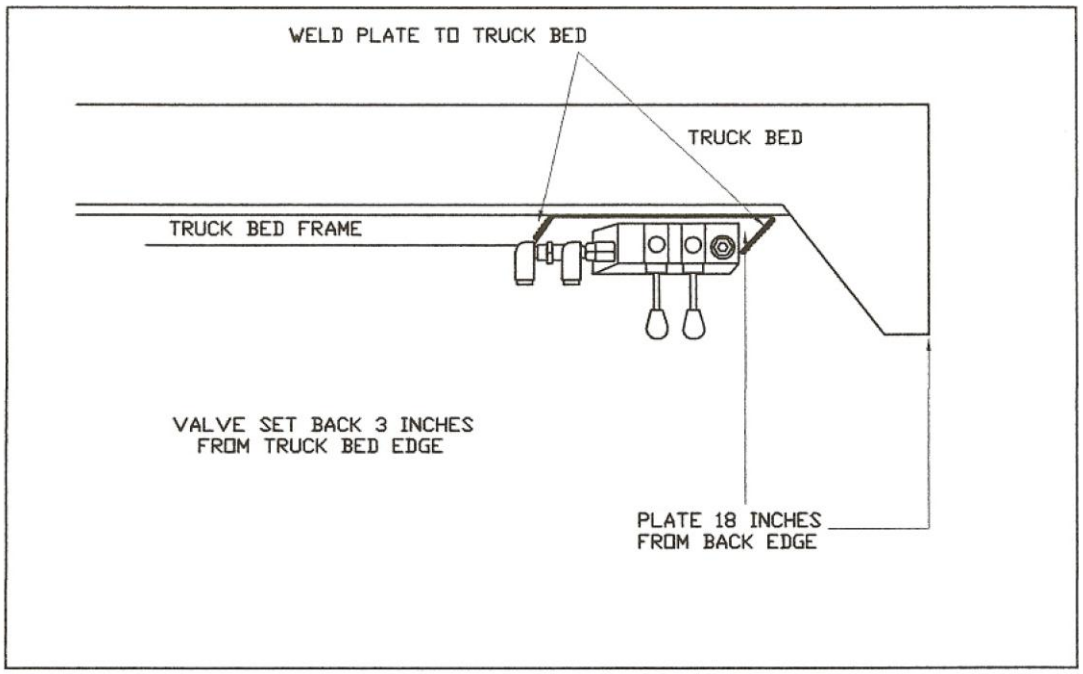

Mounting the Control Valve

1.) Position the control valve bracket (See Figure 6-2) on the left (driver's side) of the truck bed frame. Locate the rear edge of the plate (single bolt) 12 inches from the rear of the truck bed. The two bolt side of the plate should be toward the front. The edge of the plate should be about 3 inches in from the edge of the truck bed.

2.) Clamp or hold in place and weld in place with beads along the front and back sides of the plate.

3.) Clean and paint as needed.

4.) Install the control valve to the mounting plate with flat washer, lock washers and nuts.

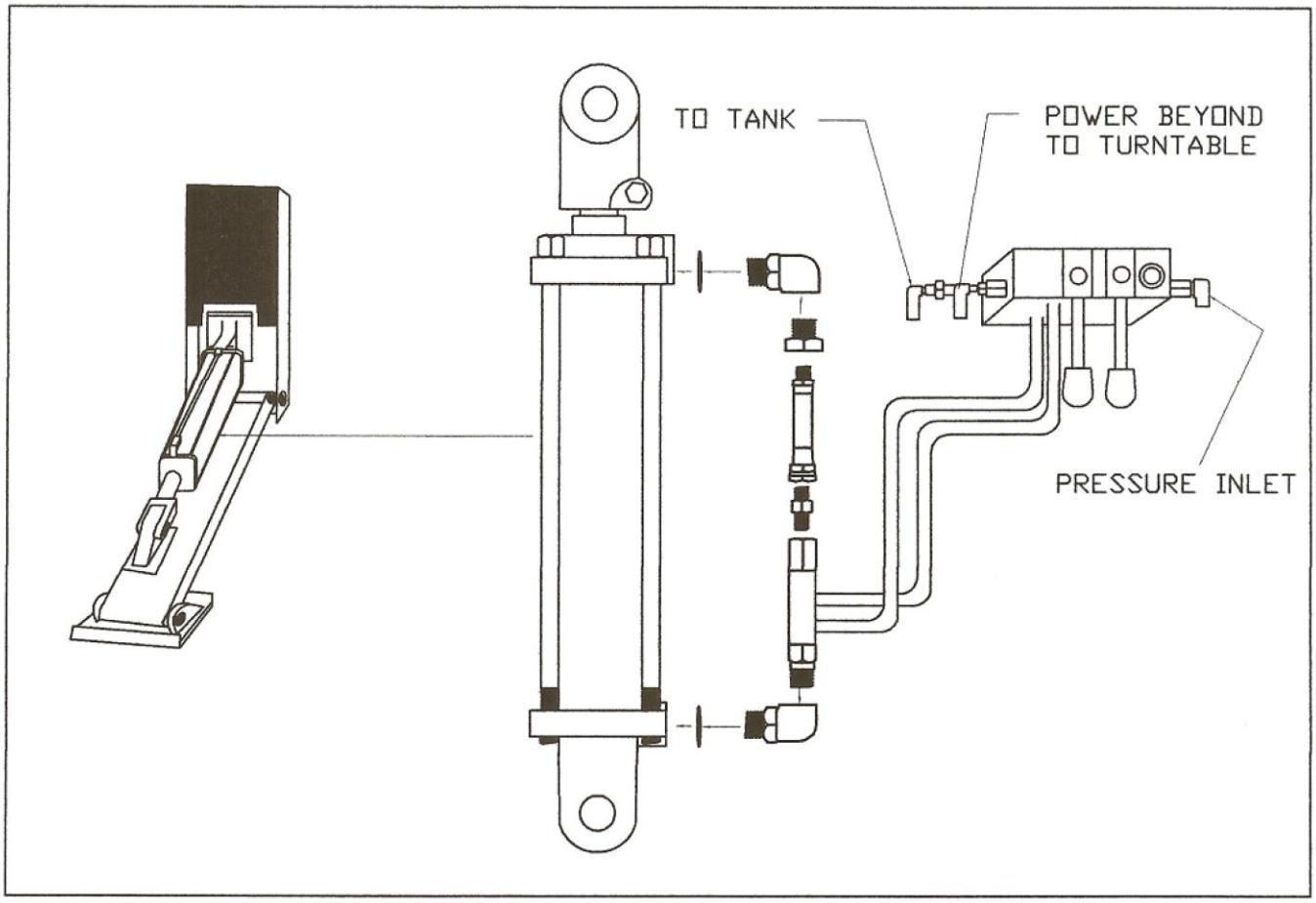

Connecting Hydraulic Lines

1.) Connect hose from tube end of cylinder on right side of truck to rear port farthest from control handle (See Figure 6-3, Hose No. 1).

2.) Connect hose from rod end of cylinder on right side of truck to rear port nearest control handle (Hose No. 2).

3.) Connect hose from tube end of cylinder on left side of truck to front port farthest from control handle (Hose No. 3).

4.) Connect hose from rod end of cylinder on left side of truck to front port nearest control handle (Hose No. 4).

5.) Connect hose from the port farthest from the control handles (on the front side of the valve (return port) to a Tee in the line from the turntable return to the hydraulic tank return (Hose No. 5).

6.) Connect hose from port nearest control handles on front side of valve (power beyond port) to pressure inlet port on turntable (Hose No. 6).

7.) Connect hose from port on rear side of valve to pressure port on hydraulic pump (Hose No. 7).

8.) Weld hooks to the outer edge of the bed and fasten about 12 inches of the ½ inch chain to the hinge pin for the stabilizer foot. The chain will secure the stabilizers while traveling.

Testing the System

1.) With the truck engine operating at idle, engage the P.T.O. and slowly operate the control valves to bleed the air from the hydraulic system. Recheck hydraulic oil level in reservoir. Fill as required.

2.) Inspect all connections for leaks.

3.) Raise and lower each stabilizer several times.

4.) Be sure the conveyor hydraulic system operates correctly.

OPERATION

Stabilizers increase the stability of truck-mounted conveyors. Stabilizers also can help in leveling the truck on slightly irregular ground. If ground is soft, place blocking under the stabilizer feet to spread the load.

Lowering the Stabilizers

1.) Set up a safety zone around the truck at least 10 feet beyond the end of the conveyor and extending up twice the length of the conveyor.

2.) Set the brakes on the truck and place the transmission in neutral. Engage the power takeoff and run the engine at idle speed.

3.) Unhook the chains supporting the stabilizer legs.

4.) Push down on the rear control handle to lower the right side stabilizer. Continue to lower the stabilizer until the truck rises slightly.

5.) Push down on the front control handle to lower the left stabilizer until the truck bed is level.

6.) If the ground is soft, place planks or blocks under the stabilizer feet for greater stability.

7.) Extend the stabilizers only enough to stabilize the truck. Do not raise the truck wheels clear of the ground.

Retracting the Stabilizers

1.) Stow the conveyor in its rack on the backboard at the front of the bed.

2.) Push up on the rear control handle to raise the right stabilizer. Raise it until the stabilizer retracts all the way. Secure the stabilizer by hooking the chain on the stabilizer to the hook on the bed.

3.) Push up on the front control handle to raise the left stabilizer. Raise it until the stabilizer fully retracts. Secure it by hooking the chain on the stabilizer to the hook on the bed.

4.) Stop the engine and disengage the power takeoff.

NOTICE

NEVER DRIVE THE TRUCK OR RACE THE ENGINE WHILE THE P.T.O. IS ENGAGED. THE PUMP IS INSTALLED TO OPERATE AT THE CORRECT SPEED AND TO PRODUCE SUFFICIENT OIL FLOW WHEN THE TRUCK IS IDLING. IF THE TRUCK IS DRIVEN OR THE MOTOR RACED WHILE THE PTO IS ENGAGED, THE PUMP MAY BE DAMAGED OR THE DRIVE LINE MAY FLY APART

MAINTENANCE

1.) Check to see that cotter pins or hairpin clips secure all hinge pins.

2.) Inspect hydraulic hoses for damage or leaks.

Weekly Maintenance

1.) Check to see that cotter pins or hairpin clips secure all hinge pins. Check pins for wear.

2.) Inspect hoses and fittings for damage or leaks.

3.) Check and tighten all bolts and nuts.

Annual Maintenance and Preparation for Storage

1.) Check cylinder seals and valve seals for leakage.

2.) Tighten bolts securing cylinder ends.

3.) Replace any worn hinge pins.

4.) Before storing, retract stabilizers to retract cylinder rods. Coat exposed rods with hydraulic fluid.

5.) Please see OSHA 29 CFR 1926.1400.

...See next page for Parts List

HYDSTABILIZERPARTS IDENTIFICATION

ITEM #	PART #	DESCRIPTION
4	12MDB	CHECK VALVE WITH FITTINGS
8	11BB	1/8" X 7" HYDRAULIC HOSE
12	14DCA	1" DIA. CYLINDER PIN W/COTTER
14	01CLAH	1" X 71/4" PIN (TOP OF LEG)
15	05LH	1" FLAT WASHER
16	06FAE	3/16" X 2 ~" COTTER
17	01CLAG	1" X 71/4" PIN (FOR STABILIZER FOOT)
18	01BGAC	STABILIZER FOOT ONLY
19	19ZA	STABILIZER LEG ONLY
19A	19ZAB	STABILIZER LEG ONLY WITH ALL HYDRAULIC PARTS
20	14BC	3 X 10 HYDRAULIC CYLINDER
20A	14CB	9200 SEAL KIT FOR 3 X 10 CYLINDER
21	19ZB	STABILIZER U-FRAME ONLY
21A	19ZBA	ONE SIDE ONLY FOR STABILIZER U-FRAME
22	10EF	8-3/8 AEOG FITTING
23	10ERA	4-F50X FITTING
24	10DDA	3/8" X 1/8" BUSHING
25	14EB	CLEA VICE FOR 3 X 10 CYLINDER
26	12BBA	TWO SPOOL STABILIZER VALVE
26A	12BGC	SEAL KIT FOR TWO SPOOL VALVE
27	19ZD	~" EARS AND PLATE ONLY FOR U-FRAME
27A	19ZE	1" EAR ONLY FOR U-FRAME
28	120B	STANDARD HANDLE
29	12PA	STANDARD HOUSING

Cleasby Conveyors of Utah
362 South Main, Clearfield, UT. 84015
801-773-1311 * 800-453-2446 * FAX 801-773-8608

CLEASBY CONVEYORS
HYDRAULIC STABILIZER
12-12-05

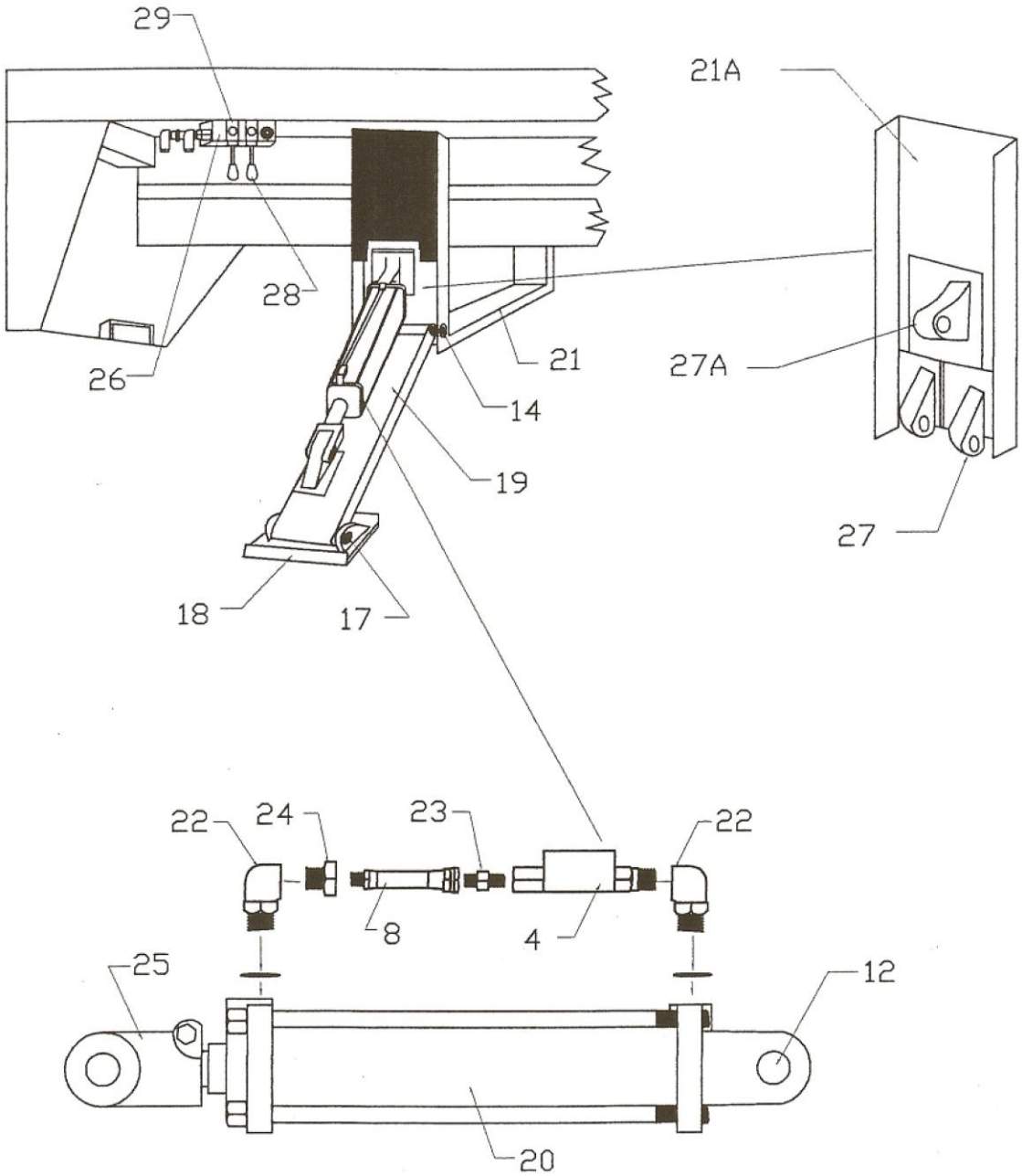

CLEASBY CONVEYORS
362 S. MAIN, CLEARFIELD, UT 84015
801-773-1311 * 800-453-2446 * FAX 801-773-8608

SECTION SEVEN
WARNING LABELS

TRUCK MOUNTED CONVEYORS
FBR-FIBERGLASS SERIES
TURNTABLES-RTH 3000, RTH 4000,
RTH 6000

362 South Main, Clearfield, UT 84015
801-773-1311 * 800-453-2446 * Fax 801-773-8608

SAFETY AND WARNING LABELS

Labels Placed by Manufacturar

Cleasby Conveyors (CM) places a number of warning labels on the conveyor and turntable to warn of dangers and to remond operators of correct operating procedures.

WARNING LABELS

The warning labels contain important warning information. Keep them visible and do not remove them.

Instruct operators to review the warning labels daily as they start to make their deliveries. This daily review of safety precautions will help your operators be more safety conscious, reducing hazards to themselves, and to others who may work near the conveyor.

Use care when cleaning to avoid damage to the warning labels by strong solvents or steam. Mask each label carefully before painting the unit. If the labels become damaged or unreadable, replace them promptly.

Labels to be Placed by You or Your Installer

1.) Truck Cab Label. In addition to lables pre-installed on turntable and conveyor, Cleasby Conveyors provides two warning labels to attach to the dash of the truck (See #13 and #15). Mount these labels in clear view of the operator, and protect them from damage as decribed above.

2.) Truck Bed Label: Cleasby Conveyors also provides five (5) warning labels (see label #14 and #20) that **must** be placed at certian locations on the truck bed (See reference drawings for truck decal placement). These labels are 5 3/8 inches deep, so if the truck on which you are installing the conveyor is not thick enough to allow for good placement of these labels, mounting brackets for the labels are available from the manufacturer.

Diagrams:

Following are various figures depicting the turntable and conveyor. Cleasby has pre-installed labels on the actual turntable and conveyors of which the figures are representative. Leader lines or arrows on the diagram designate each labels identification number and proper location on the equipment.

At the time of delivery to you (and periodically thereafter) look at the equipment with the manual in hand, checking each label in turn until you are satisfied that all labels are there, and that they are all positioned as specified in the manual.

NOTE

Additional labels and truck bed mounting brackets are available free of charge. Call your local dealer, service center or distributor. If there is no dealer in your area, call Cleasby Conveyors (800) 453-2446.

CLEASBY CONVEYORS
CONVEYOR DECAL
PLACEMENT
11-10-05

*** SEE NOTE ***

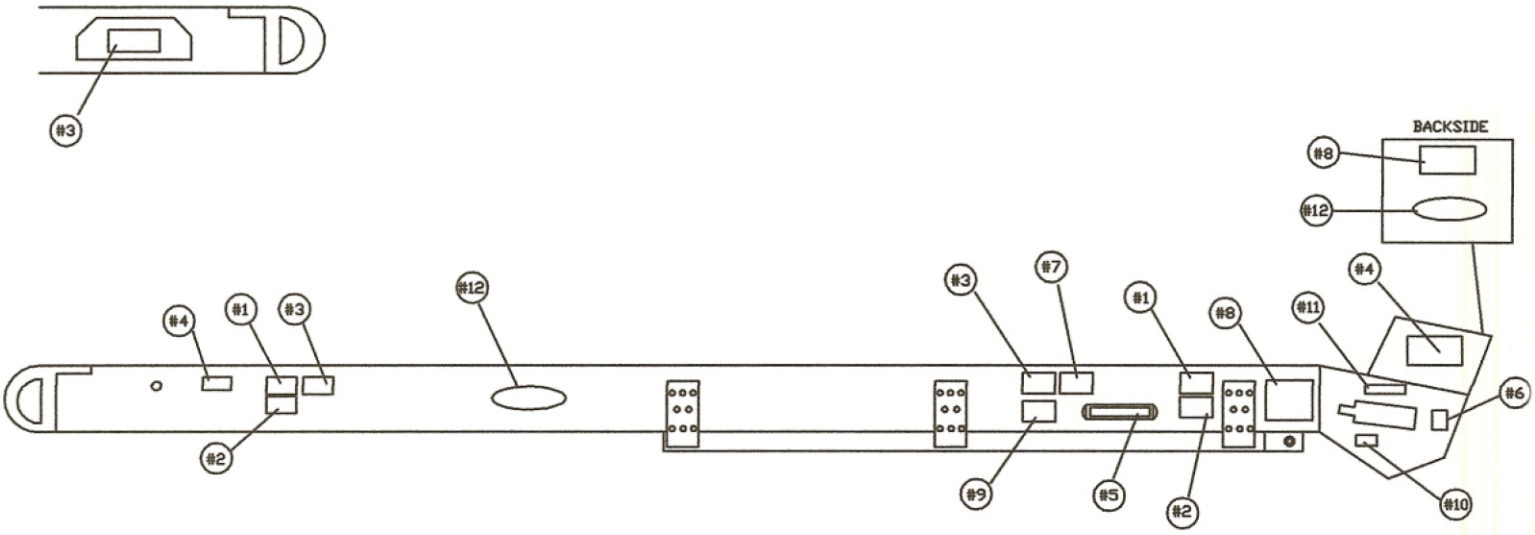

NOTE:
ALL DECALS EXCEPT BACKSIDE AND
5 ARE PLACED THE SAME WAY ON
BOTH SIDES OF THE CONVEYOR

CLEASBY CONVEYORS
362 S. MAIN, CLEARFIELD, UT 84015
801-773-1311 * 800-453-2446 * FAX 801-773-8608

CLEASBY CONVEYORS
TURNTABLE DECAL PLACEMENTS
12-12-05

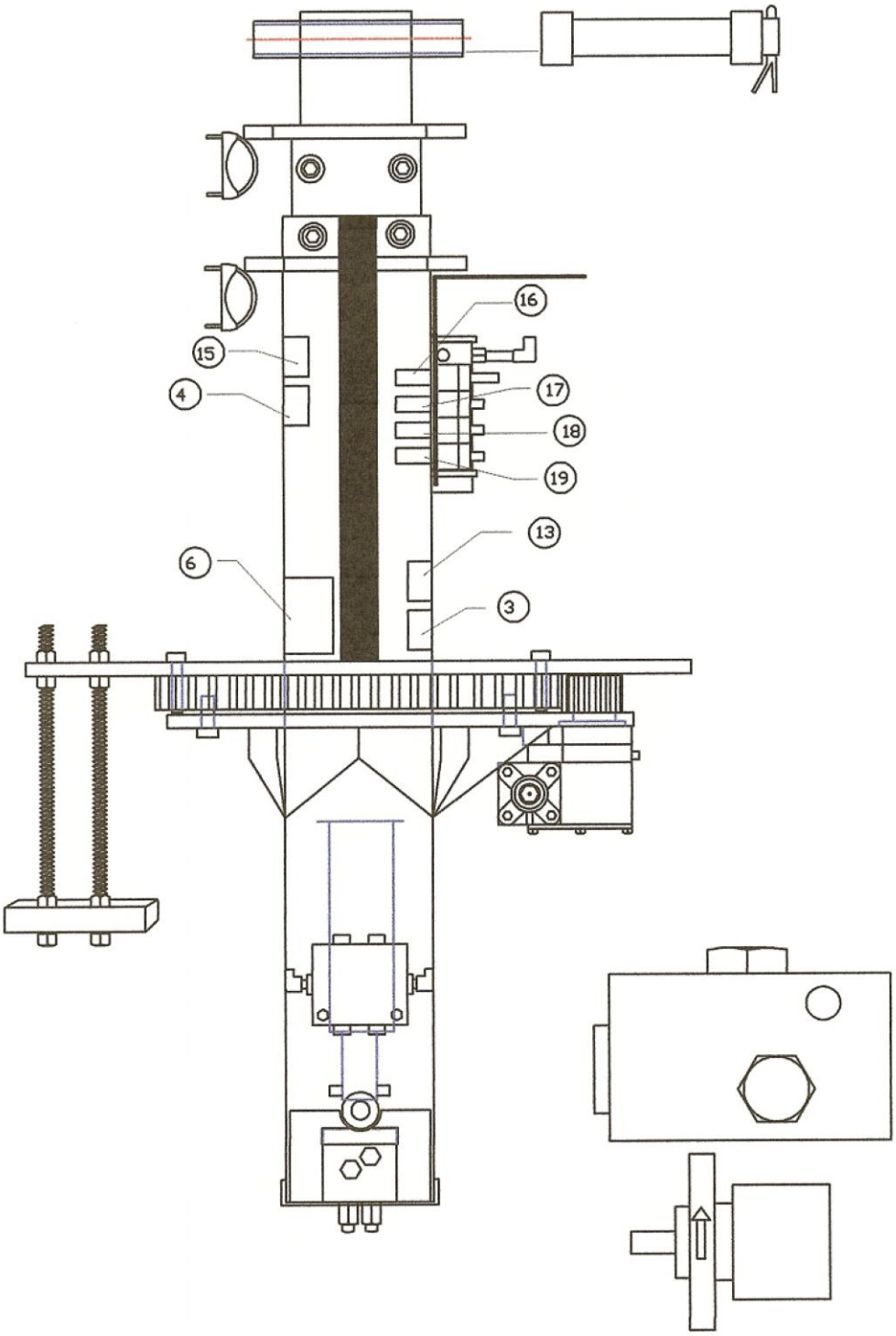

CLEASBY CONVEYORS
362 S. MAIN, CLEARFIELD,UT 84015
801-773-1311 * 800-453-2446 * FAX 801-773-8608

TRUCK DECAL PLACEMENT
12-12-05

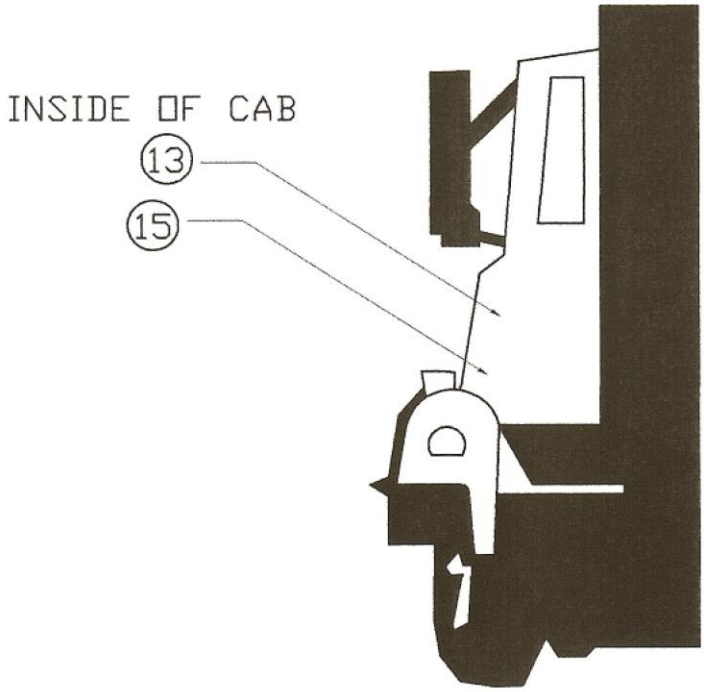

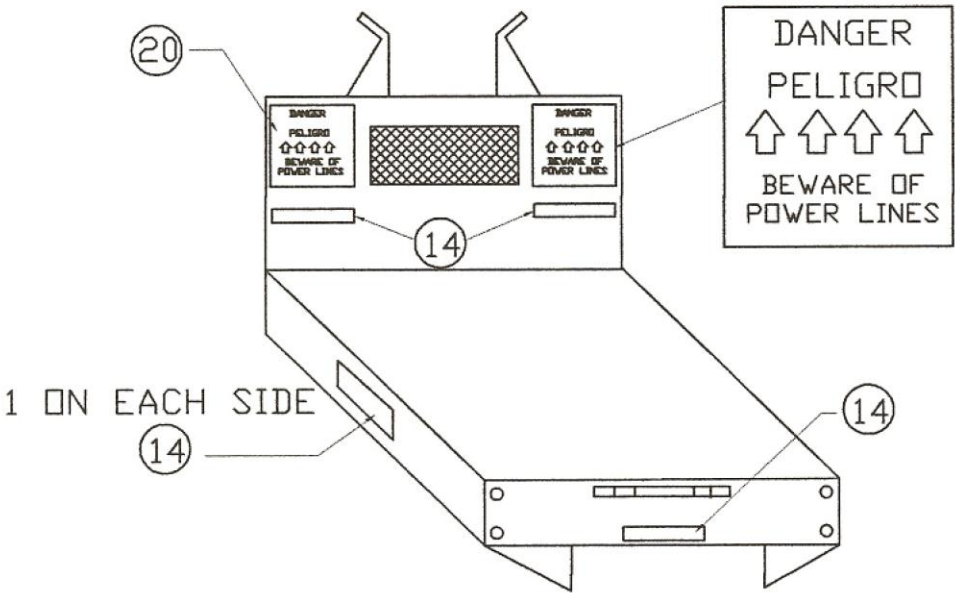

DANGER
PELIGRO
BEWARE OF
POWER LINES

SIGNS MUST BE PLACED IN BOTH CORNERS OF HEADBOARD AS SHOWN

ONE TO THE LEFT AND RIGHT OF WINDOW

CLEASBY CONVEYORS
362 S. MAIN, CLEARFIELD, UT 84015
801-773-1311 * 800-453-2446 * FAX 801-773-8608

CONVEYOR, TURNTABLE AND TRUCK DECALS
12-20-05

#1

⚠ DANGER		⚠ PELIGRO
ELECTROCUTION HAZARD		PELIGRO DE ELECTROCUCION

#2

⚠ DANGER		⚠ PELIGRO
ELECTROCUTION HAZARD		PELIGRO DE ELECTROCUCION

#3

⚠ WARNING			⚠ ADVERTENCIA
OPEN BELT OR CHAIN. MOVING PARTS CAN CRUSH AND CUT			AL ABRIR LA CORREA O LA CADENA, LAS PARTES MOVIBLES PUEDEN TRITURARSE O CORTAR.

#4

⚠ WARNING		⚠ ADVERTENCIA
IMPACT HAZARD	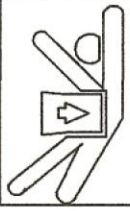	RIESGO DE IMPACTO

#6

⚠ DANGER
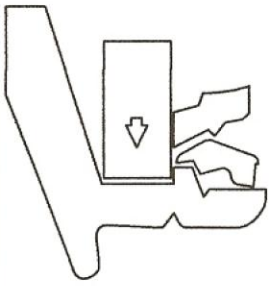
PINCH POINTS WATCH YOUR HANDS.

#5

WARNING STOP AND READ	SAFETY FIRST
ADVERTENCIA DETENGASE Y LEA	LA SEGURIDAD ES PRIMERO

NOTE:
NOT ALL WARNINGS ARE MENTIONED IN THESE DECALS. THEY HAVE BEEN SHORTNED TO FIT. DO NOT RELY ON WHAT THESE ILLUSTRATIONS SAY BUT WHAT THE ACTUAL DECALS INFORM.

CLEASBY CONVEYORS
362 SOUTH MAIN, CLEARFIELD, UTAH 84015
801 773-1311 * 800 453-2446 * FAX 801 773-8608

CONVEYOR, TURNTABLE AND TRUCK DECALS
12-20-05

#7

⚠ DANGER	⚠ PELIGRO
RISK OF DEATH OR SERIOUS INJURY	RIESGO DE MUERTE O LESION GRAVE

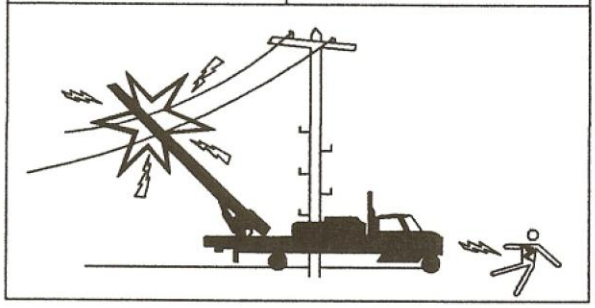

#10

ADJUST
BELT TENSION AS
NEEDED.....HERE

#8

⚠ WARNING SAFETY INSTRUCTIONS	⚠ ADVERTENCIA INSTRUCCIONES DE SEGURIDAD
IT IS UNLAWFUL TO OPERATE WITHOUT FOLLOWING THESE INSTRUCTIONS	PROHIBIDO OPERAR SIN SEGUIR LAS SIGIENTES INSTRUCCIONES.

#11

1000 LB. CAPACITY
DO NOT OVERLOAD

#9

⚠ DANGER

Electrocution Hazard
Risk of DEATH or SERIOUS INJURY if conveyor or load comes in contact with or proximity to power lines.

It is against Federal & State Law to operate conveyor within 20 feet of power lines.
ANSI B. 30.5
29 CFR 1926.1400

Hydraulic Fluid must be kept free of water and other contaminants. Because of potential for absorption or infusion of water or other contaminants in the system, frequent sampling is necessary.

When replacing hydraulic fluids, the system must be flushed and thoroughly purged of all existing fluids.

All surfaces of fiberglass materials must be maintained in a clean and dry condition.

High pressure cleaning systems or other high force medium may damage fiberglass surfaces. Once damaged, water or other contaminants may enter the core of the fiberglass matrix creating a conductive channel for electrical current to follow.
Use free flow water at standard line pressure or other low pressure device for cleaning purposes.
Use caution while cleaning.

If you are UNCLEAR or do not UNDERSTAND ANY PART of this WARNING – Contact the Manufacturer at 1-800-453-2446 for information.
DO NOT PAINT OVER THIS OR ANY OTHER LABEL.
CALL 1-800-453-2446 FOR FREE REPLACEMENT LABELS.

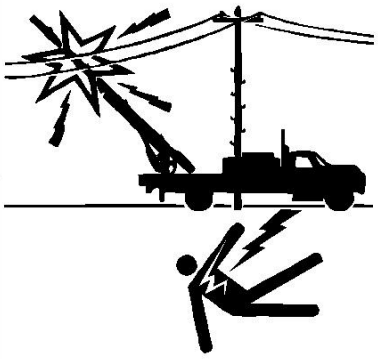

22DOA

⚠ PELIGRO

Peligro de Electrocución
Riesgo de MUERTE o LESIÓN GRAVE si el transportador o la carga entra en contacto con o se aproxima a los cables de alta tensión.

Es contra la Ley Federal y Estatal operar un transportador a menos de 6 metros de los cables de alta tensión.
ANSI B. 30.5
29 CFR 1926.1400

Se debe mantener el Líquido Hidráulico libre del contracto con el agua y otros contaminantes. Debido al potencial de filtración o infusión de agua u otros contaminantes en el sistema, es necesario un muestreo frecuente.

Cuando se reemplazan los Líquidos hidráulicos, se debe purgar el sistema y depurar perfectamente todos los fluidos existentes.

Todas las superficies de material de fibra de vidrio deben mantenerse limpias y secas.

Los sistemas de limpieza de alta presión u otros medios con altos niveles de fuerza pueden dañar las superficies de fibra de vidrio. Una vez dañadas, el agua y otros contaminantes pueden ingresar al núcleo de la matriz de la fibra de vidrio, creando un canal de conducción para que se transmita la corriente eléctrica.
Para realizar la limpieza, utilice agua que no se encuentre saliendo en la línea de presión estándar u otro dispositivo de baja presión.
Realice la limpieza con cuidado.

Si está CONFUNDIDO o NO COMPRENDE ALGUNA SECCIÓN de esta ADVERTENCIA - Comuníquese con el Fabricante al 1-800-453-2446 para obtener INFORMACIÓN.
NO PINTE ESTA O ALGUNA OTRA ETIQUETA.
PARA OBTENER ETIQUETAS DE REEMPLAZO GRATUITAMENTE, L.

NOTE:
NOT ALL WARNINGS ARE MENTIONED IN THESE DECALS. THEY HAVE BEEN SHORTNED TO FIT. DO NOT RELY ON WHAT THESE ILLUSTRATIONS SAY BUT WHAT THE ACTUAL DECALS INFORM.

CLEASBY CONVEYORS
362 SOUTH MAIN, CLEARFIELD, UT 84015
801 773-1311 * 800 453-2446 * FAX 801 773-8608

CONVEYOR, TURNTABLE AND
TRUCK DECALS
12-20-05

#12

CLEASBY CONVEYORS
362 SOUTH MAIN, CLEARFIELD, UTAH 84015
801 773-1311 * 800 453-2446 * FAX 801 773-8608

CONVEYOR, TURNTABLE AND TRUCK DECALS
12-20-05

#13

DANGER	PELIGRO
RISK OF DEATH OR SERIOUS INJURY	RIESGO DE MUERTE O LESION GRAVE

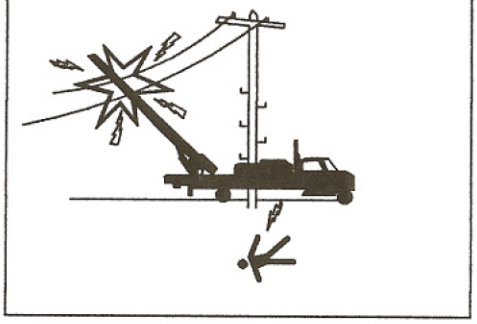

#14

DANGER		PELIGRO
ELECTROCUTION HAZARD KEEP CLEAR	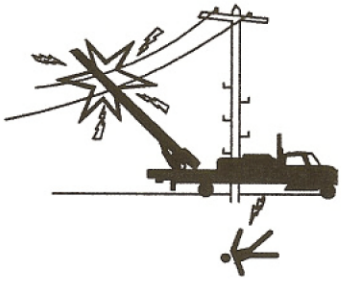	PELIGRO DE ELECTROCUTAR MANTENGA SU DISTANCIA

#15

WARNING		ADVERTENCIA
VEHICLE ROTATION HAZARD RISK OF FALLING OR OTHER SERIOUS INJURY	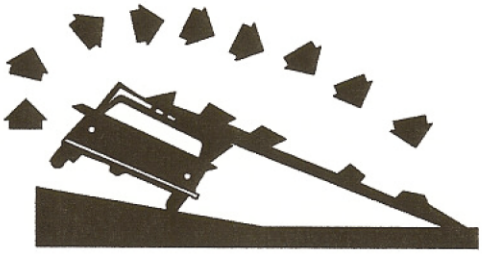	PELIGRO DE GIRO DEL VEHICULO RIESGO DE CAIDA U OTRAS LESIONES SERIAS.

CLEASBY CONVEYORS
362 S. MAIN, CLEARFIELD, UT 84015
801-773-1311 * 800-453-2446 * FAX 801-773-8608

CONVEYOR, TURNTABLE AND TRUCK DECALS

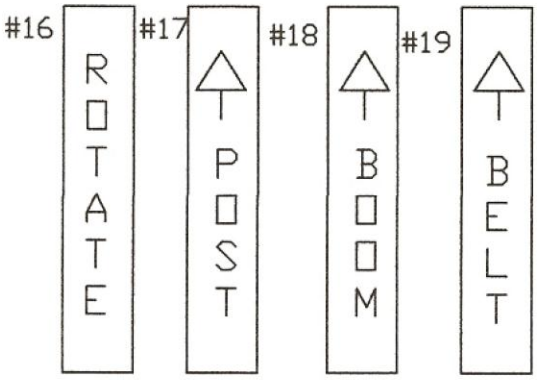

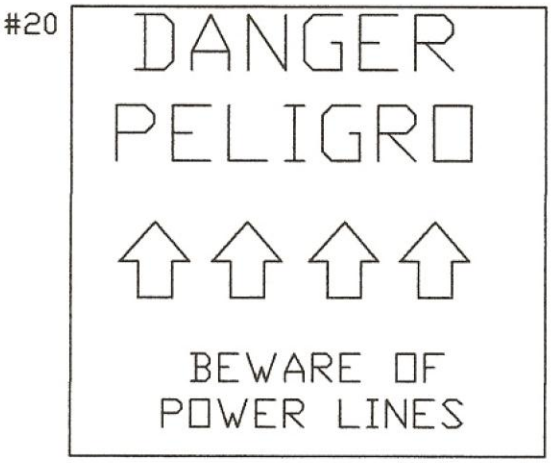

CLEASBY CONVEYORS
362 S. MAIN, CLEARFIELD, UT 84015
801-773-1311 * 800-453-2446 * FAX 801-773-8608